TREMONTON CITY CORPORATION

GENERAL PUBLIC WORKS CONSTRUCTION STANDARDS AND SPECIFICATIONS

STANDARD DRAWINGS
APPENDIX "A"

SUBMITTED & RECOMMENDED

CHRIS L. BREINHOLT, P.E. DATE
TREMONTON CITY ENGINEER

APPROVAL

ROGER FRIDAL DATE
TREMONTON CITY MAYOR

PAUL FULGHAM DATE
TREMONTON CITY PUBLIC WORKS DIRECTOR

SHAWN WARNKE DATE
TREMONTON CITY MANAGER

ATTEST, CITY RECORDER DATE

OCTOBER 13, 2015

JONES & ASSOCIATES
CONSULTING ENGINEERS
1716 East 5600 South
South Ogden, Utah 84403 (801) 476-9767

Index of Drawings

1.....TITLE PAGE & INDEX OF DRAWINGS
2.....ROADWAY SURFACE IMPROVEMENTS
2A....STANDARD RESIDENTIAL & LOW IMPACT ROAD SECTIONS
2B....COLLECTOR ROADWAY SECTIONS
2C....MINOR & MAJOR ARTERIAL ROADWAY SECTION
3.....DRIVEWAY APPROACH DETAILS
4.....STANDARD STREET INTERSECTION DETAILS
5.....TYPICAL WHEELCHAIR RAMP
6.....CUL-DE-SAC DETAILS
7.....FIRE HYDRANT AND WATER SERVICE CONNECTIONS
8.....TYPICAL WATER METER STATIONS
9.....P.R.V. STATION & AIR/VACUUM RELEASE STATION
10....SANITARY SEWER DETAILS
11....SANITARY SEWER MANHOLE DETAILS
12....CATCH BASINS & STORM DRAIN CLEANOUT MANHOLE
13....TYPE V CATCH BASIN & OUTLET DIPSTONE DETAILS
14....STORM DRAIN MANHOLE & SUBSURFACE DRAINAGE DETAILS
15....FENCING STANDARD DETAILS
15A..MASONRY WALL DETAILS
15B..VINYL FENCE DETAILS
16....SECONDARY WATERLINE AND DRIVEWAY CULVERT DETAIL
17....TREE DETAILS
18....SPRINKLER DETAILS
19....TRAILS DETAILS
20....CITY OWNED STREET LIGHT DETAILS
21....STANDARD FIBER OPTIC COMMUNICATION LINE DETAILS

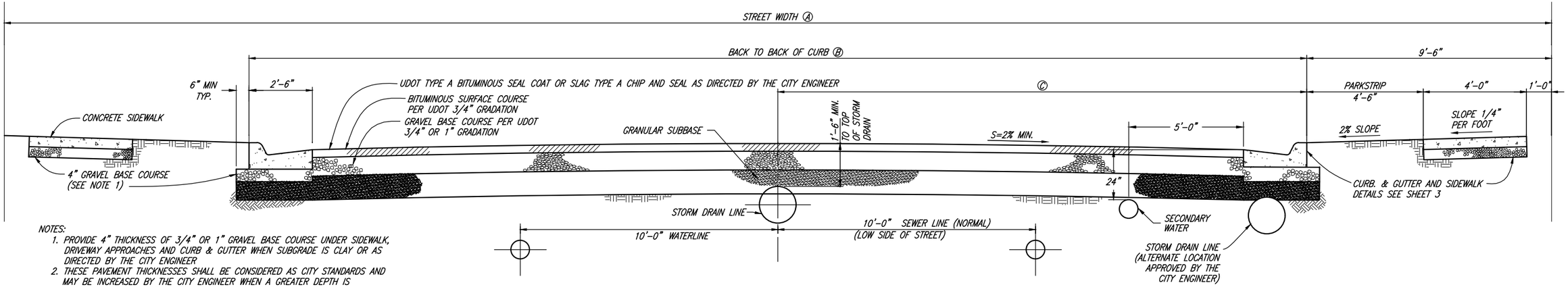

NOTES:
1. PROVIDE 4" THICKNESS OF 3/4" OR 1" GRAVEL BASE COURSE UNDER SIDEWALK, DRIVEWAY APPROACHES AND CURB & GUTTER WHEN SUBGRADE IS CLAY OR AS DIRECTED BY THE CITY ENGINEER
2. THESE PAVEMENT THICKNESSES SHALL BE CONSIDERED AS CITY STANDARDS AND MAY BE INCREASED BY THE CITY ENGINEER WHEN A GREATER DEPTH IS NECESSARY TO PROVIDE SUFFICIENT STABILITY. DESIGNER AND/OR DEVELOPER MAY SUBMIT AN ALTERNATIVE PAVEMENT DESIGN BASED ON A DETAILED SOILS ANALYSIS FOR APPROVAL BY THE CITY ENGINEER WHICH MAY MODIFY PAVEMENT THICKNESS, BUT IN NO CASE SHALL THE BITUMINOUS SURFACE COURSE BE LESS THAN 3" AND GRAVEL BASE COURSE LESS THAN 4" THICK

STANDARD TREMONTON CITY ROADWAY SECTION

NOTES:
THESE PAVEMENT THICKNESSES SHALL BE CONSIDERED AS CITY STANDARDS AND MAY BE INCREASED BY THE CITY ENGINEER WHEN A GREATER DEPTH IS NECESSARY TO PROVIDE SUFFICIENT STABILITY. DESIGNER AND/OR DEVELOPER MAY SUBMIT AN ALTERNATIVE PAVEMENT DESIGN BASED ON A DETAILED SOILS ANALYSIS FOR APPROVAL BY THE CITY ENGINEER WHICH MAY MODIFY PAVEMENT THICKNESS, BUT IN NO CASE SHALL THE BITUMINOUS SURFACE COURSE BE LESS THAN 3" AND GRAVEL BASE COURSE LESS THAN 4" THICK.

STREET DESIGNATION	R.O.W. WIDTH Ⓐ	T.B.C. TO T.B.C. Ⓑ	℄ TO T.B.C. Ⓒ	A.C.	BASE COURSE	GRANULAR BORROW	MAX. GRADE	MAX. SUSTAINED GRADE
MINOR	50'	SEE SHEET 2	SEE SHEET 2	3"	8"	8"	12%	9%
LOW IMPACT	60'	SEE SHEET 2A	SEE SHEET 2A	3"	8"	8"	12%	9%
STANDARD RESIDENTIAL	60'	SEE SHEET 2A	SEE SHEET 2A	3"	8"	8"	12%	9%
COLLECTOR	66'	SEE SHEET 2B	SEE SHEET 2B	3"	8"	12"	10%	7%
MINOR ARTERIAL	80'	SEE SHEET 2C	SEE SHEET 2C	3 1/2"	10"	15"	10%	7%
MAJOR ARTERIAL	100'	SEE SHEET 2C	SEE SHEET 2C	4"	12"	18"	10%	7%

NOTES:
1. MAXIMUM DIFFERENCE IN ELEVATION BETWEEN CURBS ON OPPOSITE SIDES OF THE STREET SHALL NOT EXCEED THOSE SHOWN IN THE CROWN LOCATION TABLE BELOW.
2. THE LOCATION OF SIDEWALK AND CURB AND GUTTER MAY VARY ON INDIVIDUAL ARTERIAL STREETS PER DIRECTION OF THE CITY ENGINEER.
3. STREET INTERSECTIONS SHALL HAVE A VERTICAL ALIGNMENT SUCH THAT THE GRADE SHALL NOT EXCEED THREE (3) PERCENT FOR A MINIMUM DISTANCE OF FIFTY (50) FEET EACH WAY FROM THE CENTERLINE OF THE INTERSECTION.
4. MAXIMUM GRADES SHALL BE APPROVED ONLY WHEN ACCOMPANIED BY CHANGES TO A LESSER GRADE, AND WHERE LENGTH OF THAT PORTION OF THAT ROAD AT MAXIMUM GRADE IS LESS THAN SIX HUNDRED (600) FEET.

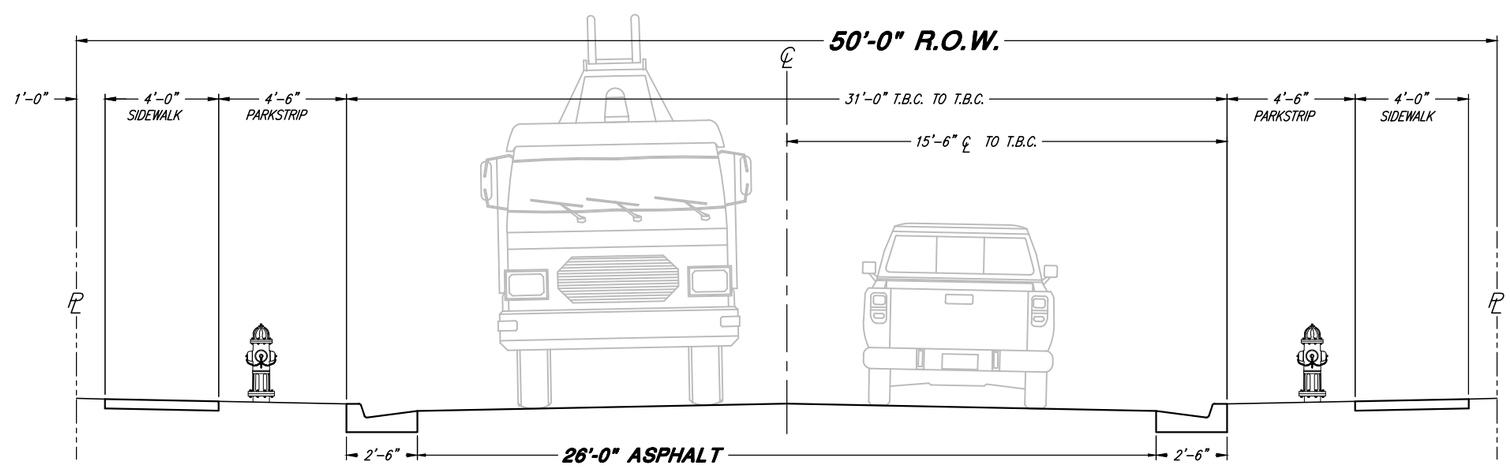

STANDARD MINOR ROADWAY SECTION

SCALE: N.T.S.

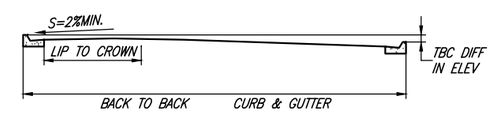

CROWN LOCATION TABLE

TBC – TBC	LIP TO CROWN	ELEV. DIFF.
41'	20'	0.00
41'	12.0'	0.50
41'	10.0'	1.00
47'	23.5'	0.00
47'	10.5'	0.50
47'	10.5'	1.00

NOTE:
ALL OTHER PROPOSED STREET X-SECTION SHALL BE AS APPROVED BY THE CITY ENGINEER

CROWN LOCATION FOR VARIOUS CROSS SLOPES

REGISTERED PROFESSIONAL ENGINEER No. 276381 CHRIS L. BREMHOLT STATE OF UTAH

PROJECT ENGINEER

FEBRUARY 2010
DATE

REV.	DATE	APPR.	
1	NOV.09	CLB	ADD SECTION FROM SHT. 16, MOVE DRIVEWAY APPROACH TO SHT. 3
2	FEB.10	BEB	ADD MINOR STREET SECTION, MOVE LOW IMPACT ROAD TO SHT. 2A

SCALE: N.T.S.

DESIGNED BEB
DRAWN BEB
CHECKED CLB

JONES & ASSOCIATES
CONSULTING ENGINEERS
1716 East 5600 South
South Ogden, Utah 84403 (801) 476-9767

TREMONTON CITY CORPORATION
PUBLIC WORKS STANDARDS
ROADWAY SURFACE IMPROVEMENTS

SHEET: 2 OF 21 SHEETS

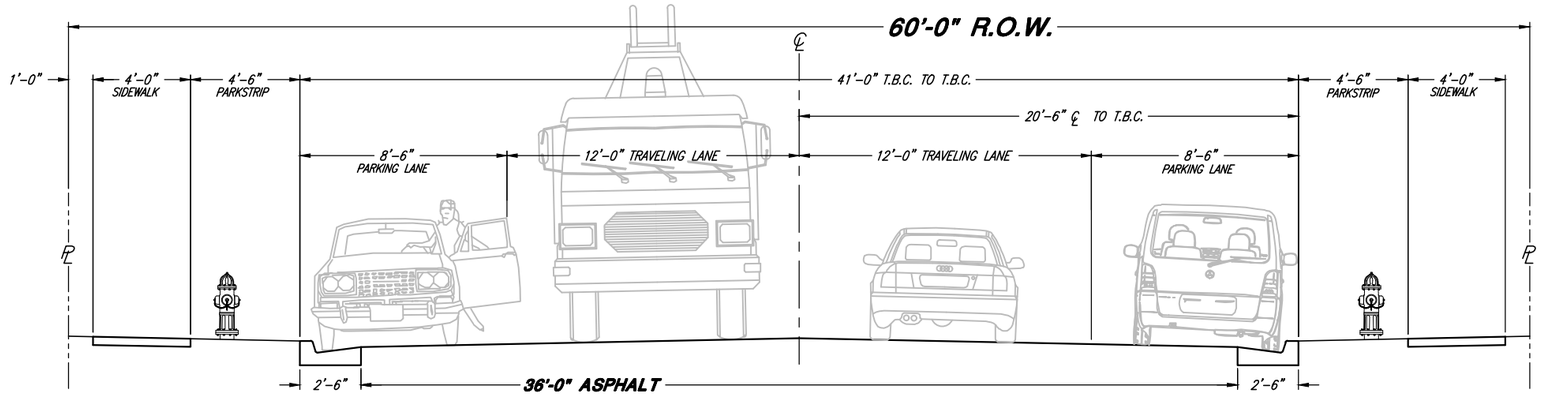

STANDARD RESIDENTIAL ROADWAY SECTION

N.T.S.

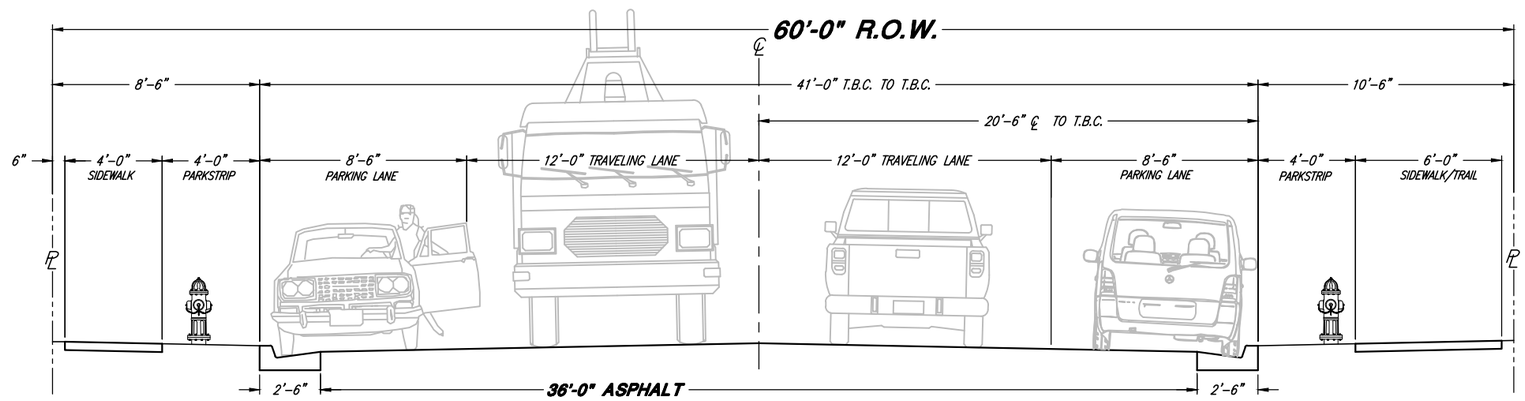

RESIDENTIAL W/ TRAIL SECTION (SECTION "A-A")

N.T.S.

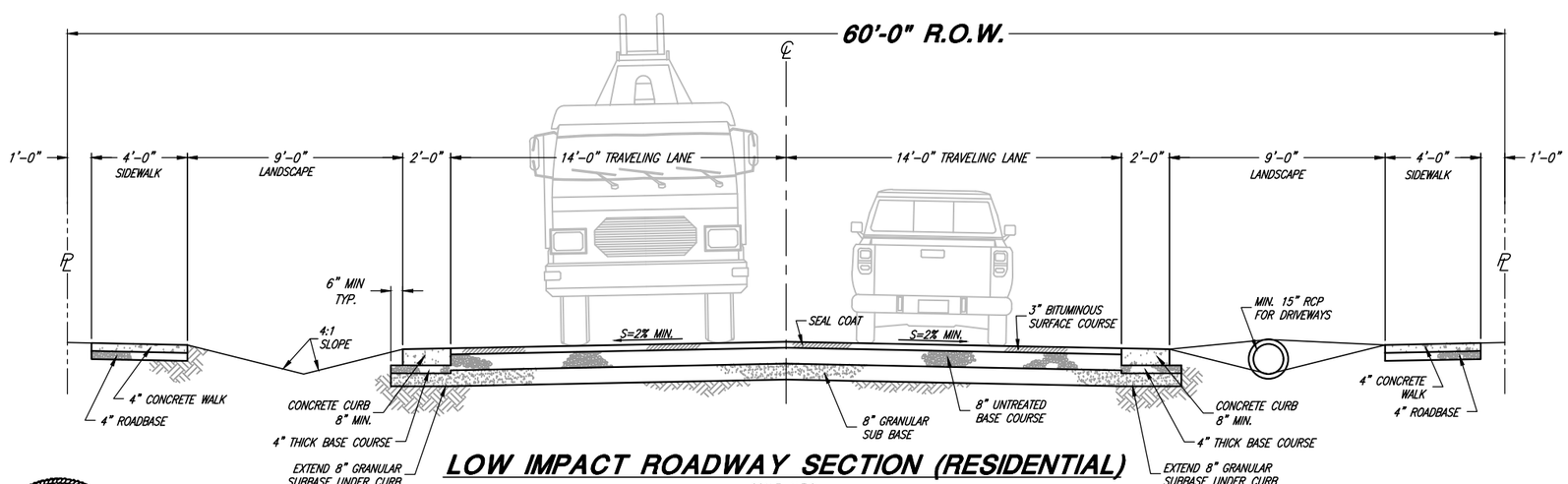

LOW IMPACT ROADWAY SECTION (RESIDENTIAL)

SCALE: N.T.S.

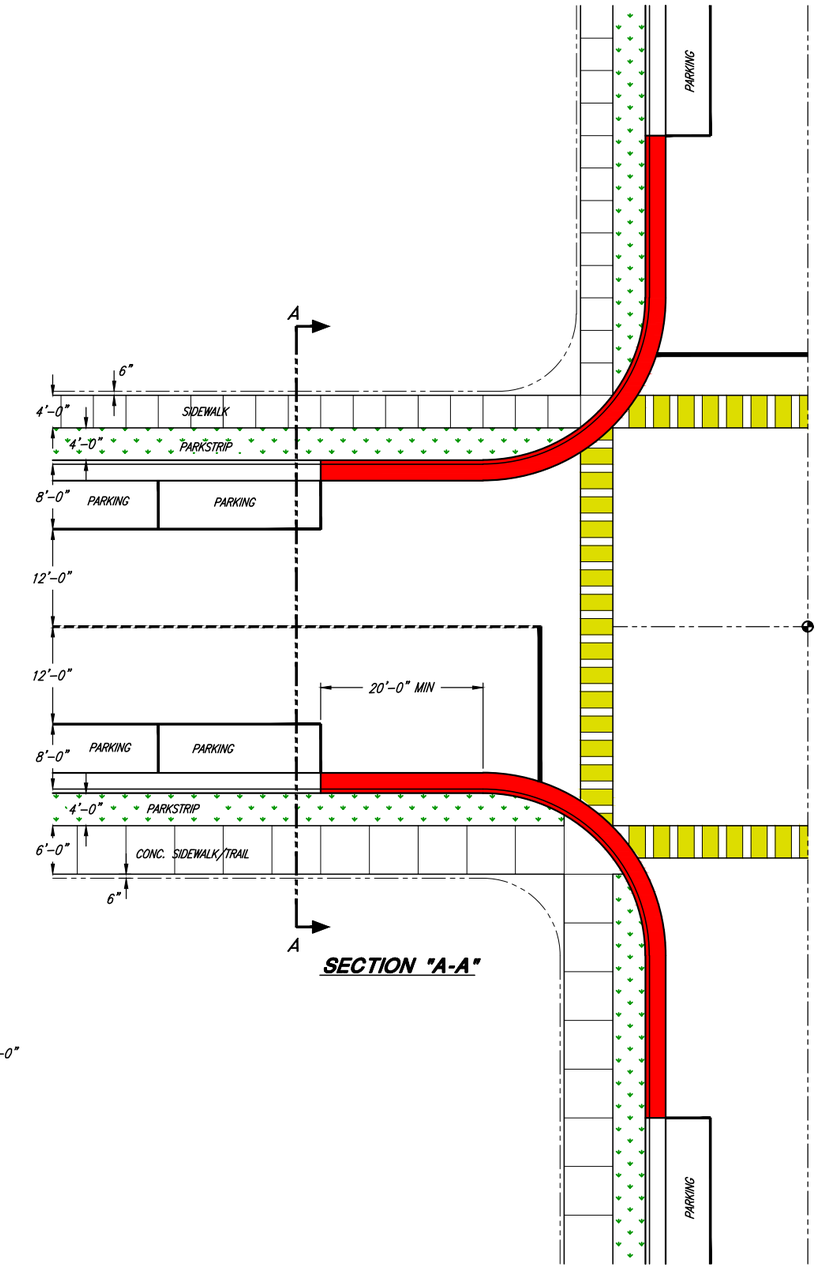

SECTION "A-A"

REGISTERED PROFESSIONAL ENGINEER No. 276381 CHRIS L. BRENHOLT STATE OF UTAH

PROJECT ENGINEER

FEBRUARY 2010
DATE

REV.	DATE	APPR.	
1	NOV.09	CLB	ADD SECTION FROM SHT. 16, MOVE DRIVEWAY APPROACH TO SHT. 3
2	FEB.10	BEB	ADD LOW IMPACT & STANDARD RESIDENTIAL SECTIONS, ADD SHT. 2A

SCALE: N.T.S.

DESIGNED BEB
DRAWN BEB
CHECKED CLB

JA JONES & ASSOCIATES
CONSULTING ENGINEERS
1716 East 5600 South
South Ogden, Utah 84403 (801) 476-9767

TREMONTON CITY CORPORATION
PUBLIC WORKS STANDARDS

STANDARD RESIDENTIAL & LOW IMPACT ROAD SECTIONS

SHEET: 2A OF 21 SHEETS

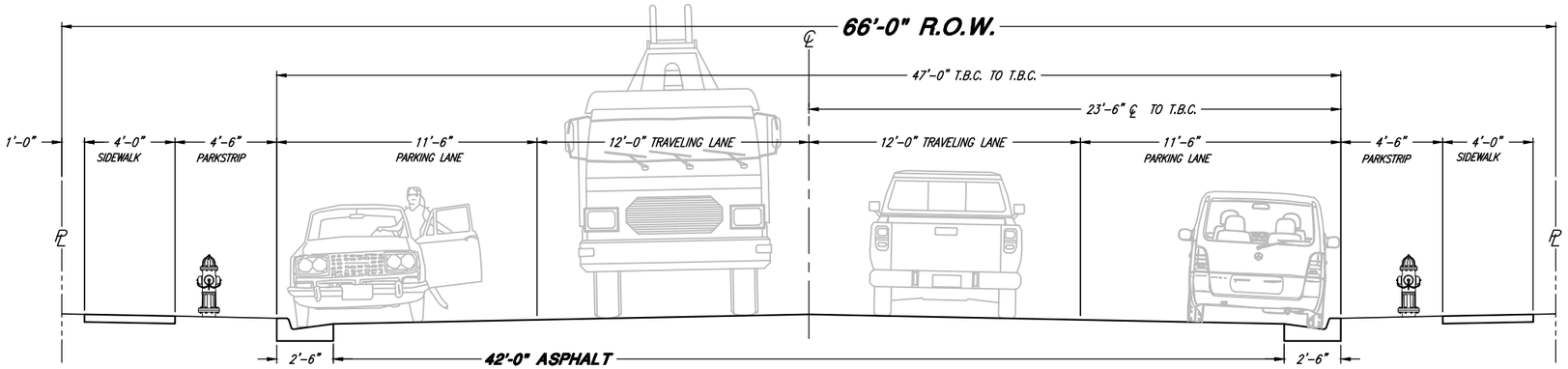

STANDARD COLLECTOR ROADWAY SECTION

SCALE: N.T.S.

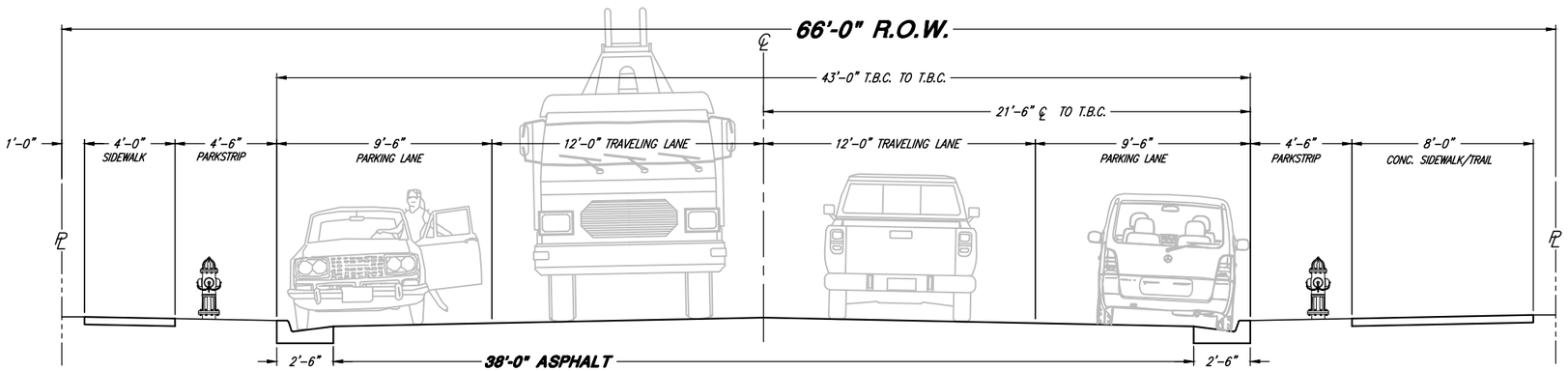

COLLECTOR W/ TRAIL SECTION & STREET PARKING

(SECTION "B-B")

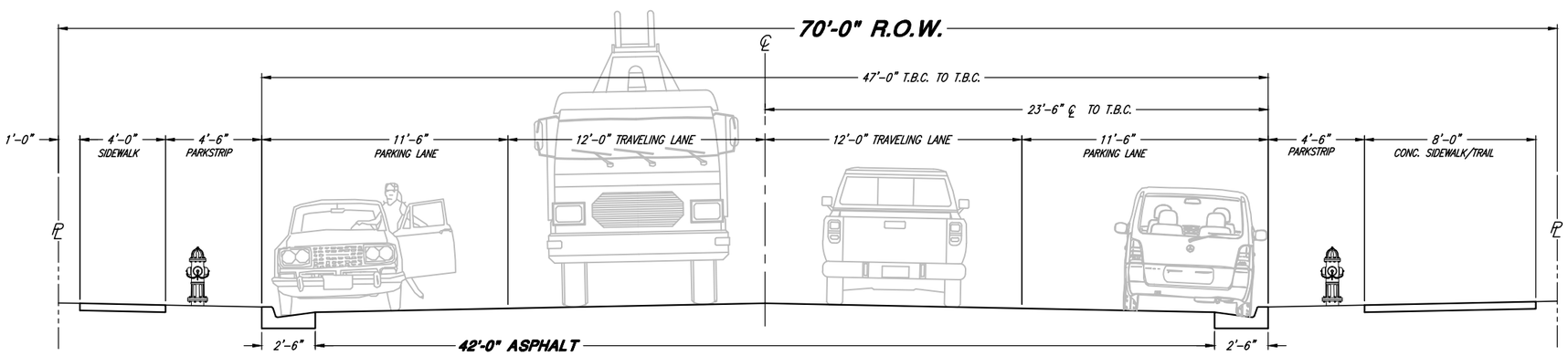

EXTENDED COLLECTOR R.O.W. W/ TRAIL SECTION & STREET PARKING

EXTENDED TO A 70'-0" R.O.W.

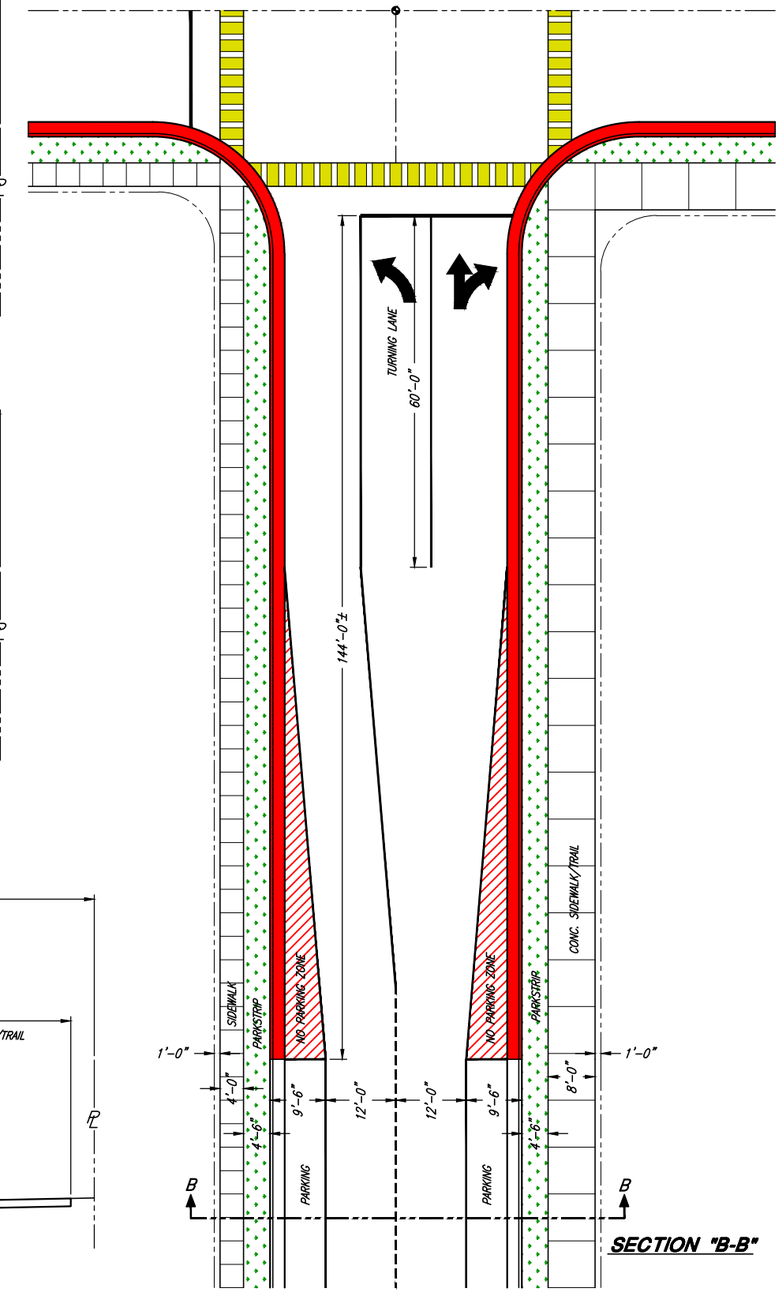

SECTION "B-B"

REGISTERED PROFESSIONAL ENGINEER No. 276381 CHRIS L. BRENHOLT STATE OF UTAH

PROJECT ENGINEER

FEBRUARY 2010
DATE

REV.	DATE	APPR.	
1	NOV.09	CLB	ADD SECTION FROM SHT. 16, MOVE DRIVEWAY APPROACH TO SHT. 3
2	FEB.10	BEB	ADD COLLECTOR ROAD SECTIONS, ADD SHT. 2B

SCALE: N.T.S.

DESIGNED BEB
DRAWN BEB
CHECKED CLB

JONES & ASSOCIATES
CONSULTING ENGINEERS
1716 East 5600 South
South Ogden, Utah 84403 (801) 476-9767

TREMONTON CITY CORPORATION
PUBLIC WORKS STANDARDS

COLLECTOR ROADWAY SECTIONS

SHEET: 2B OF 21 SHEETS

MINOR ARTERIAL ROAD SECTIONS

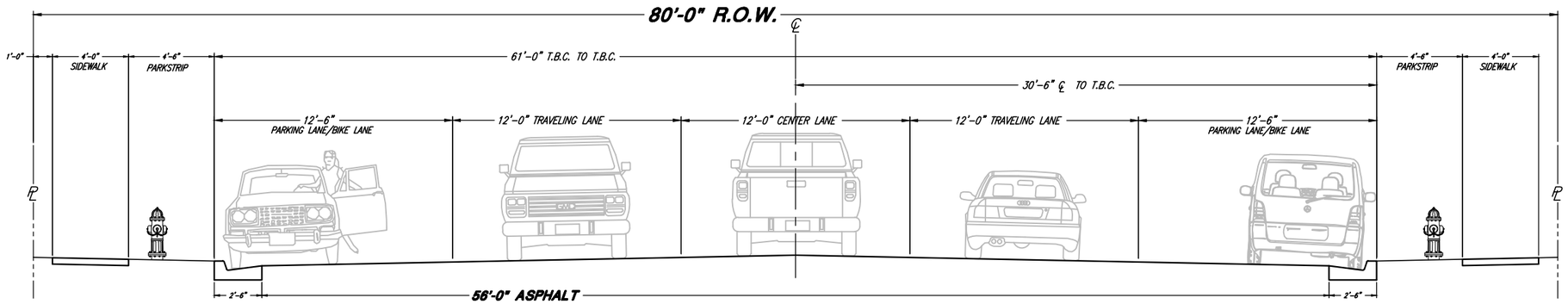

STANDARD MINOR ARTERIAL ROADWAY SECTION

SCALE: N.T.S.

MAJOR ARTERIAL ROAD SECTIONS

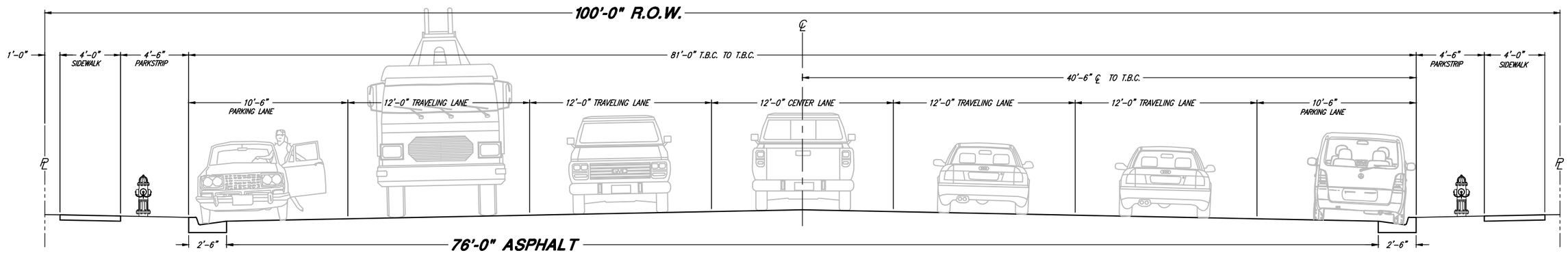

STANDARD MAJOR ARTERIAL ROADWAY SECTION

SCALE: N.T.S.

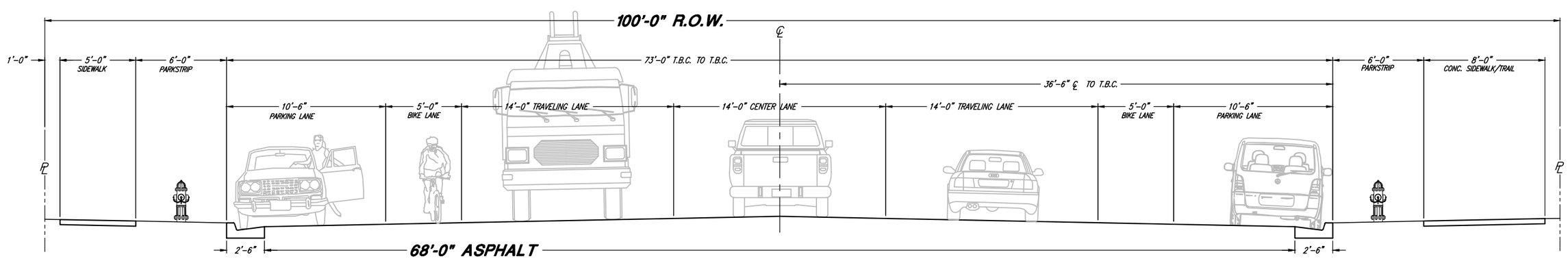

MAJOR ARTERIAL W/ TRAIL & BIKE LANE SECTION

SCALE: N.T.S.

REGISTERED PROFESSIONAL ENGINEER No. 276381 CHRIS L. BRENHOLT STATE OF UTAH

PROJECT ENGINEER

FEBRUARY 2010
DATE

REV.	DATE	APPR.	
1	NOV.09	CLB	ADD SECTION FROM SHT. 16, MOVE DRIVEWAY APPROACH TO SHT. 3
2	FEB.10	BEB	ADD MINOR & MAJOR ARTERIAL ROAD SECTIONS, ADD SHT. 2C

SCALE: N.T.S.

DESIGNED BEB
DRAWN BEB
CHECKED CLB

JONES & ASSOCIATES
CONSULTING ENGINEERS
1716 East 5600 South
South Ogden, Utah 84403 (801) 476-9767

TREMONTON CITY CORPORATION
PUBLIC WORKS STANDARDS

MINOR & MAJOR ARTERIAL ROADWAY SECTIONS

SHEET: 2C OF 21 SHEETS

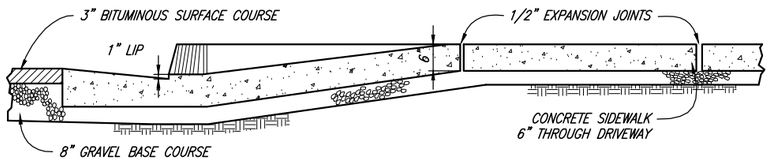

SECTION A-A

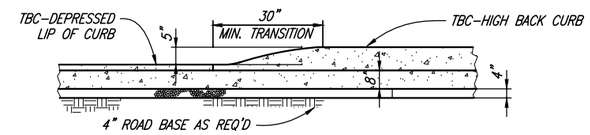

SECTION B-B

NOTE:
SCORE SIDEWALK 1/4" OF SIDEWALK THICKNESS @ EACH 4'-0" EXPANSION JOINTS @ EACH 32'-0"
PROVIDE ADDITIONAL CONTRACTION JOINTS ON OVERSIZE DRIVEWAYS AT 5'-0" MAX. SPACING

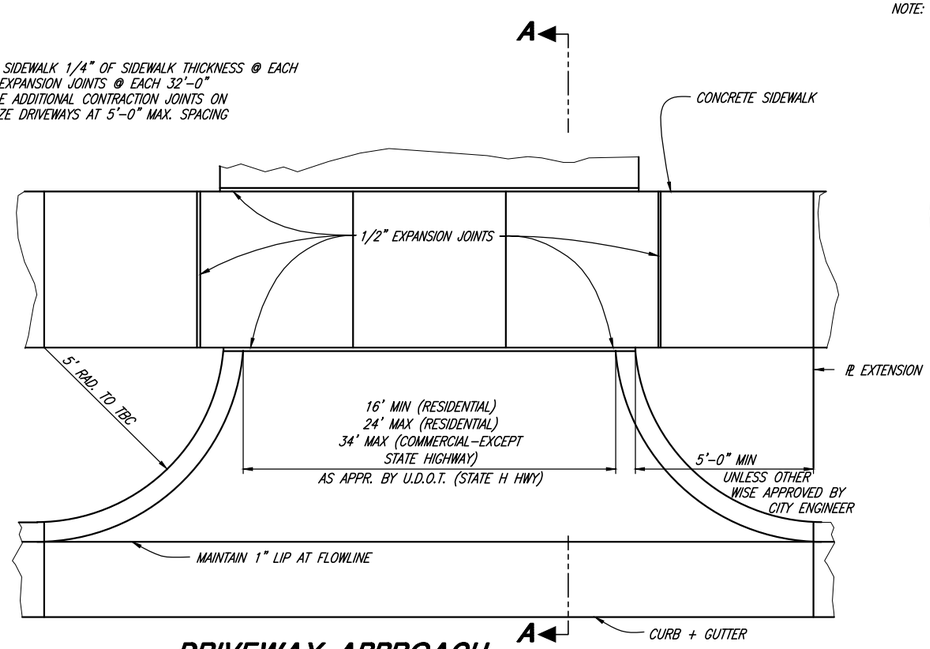

DRIVEWAY APPROACH

CURB RADIUS STYLE (SPECIAL CASE APPROVAL REQUIRED)

NOTE: IN NEW SUBDIVISIONS WHERE FUTURE DRIVEWAY LOCATIONS ARE UNKNOWN , THE DRIVEWAY APPROACH SHALL BE MADE BY SAW CUTTING THE BACK OF THE EXISTING CURB TO THE REQUIRED DRIVEWAY WIDTH. ALL SAW CUTTING SHALL BE ACCOMPLISHED BY A CITY APPROVED LICENSED CONTRACTOR.

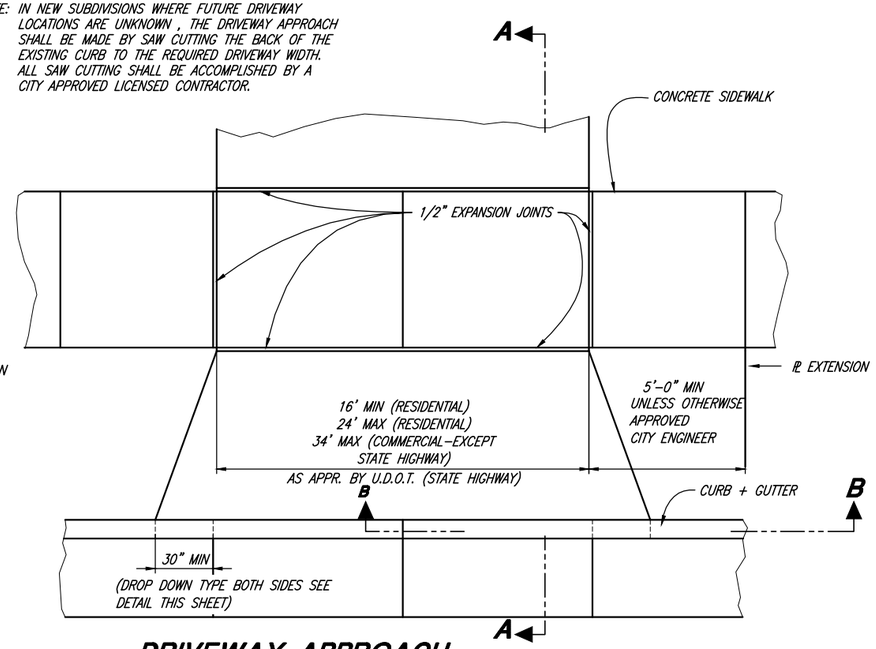

DRIVEWAY APPROACH

DROP DOWN STYLE

REGISTERED PROFESSIONAL ENGINEER No. 276361 CHRIS L. BREMHOLT STATE OF UTAH

PROJECT ENGINEER

FEBRUARY 2010
DATE

REV.	DATE	APPR.	
1	NOV.09	CLB	MOVE DRIVEWAY APPROACH TO SHEET 3

SCALE: N.T.S.

DESIGNED KLJ
DRAWN EDH
CHECKED CLB

JONES & ASSOCIATES
CONSULTING ENGINEERS
1716 East 5600 South
South Ogden, Utah 84403 (801) 476-9767

TREMONTON CITY CORPORATION
PUBLIC WORKS STANDARDS

DRIVEWAY APPROACH DETAILS

SHEET: 3 OF 21 SHEETS

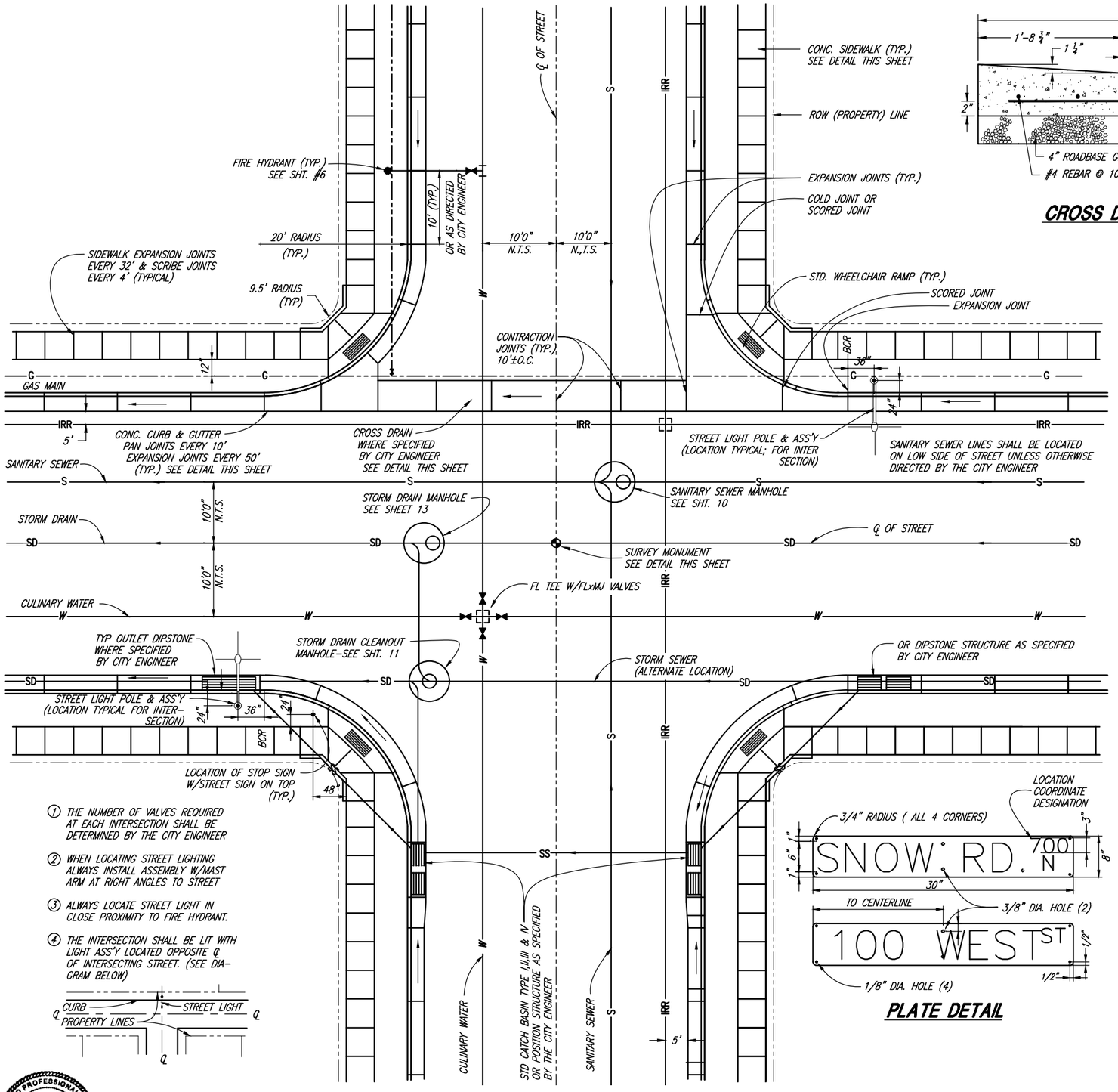

① THE NUMBER OF VALVES REQUIRED AT EACH INTERSECTION SHALL BE DETERMINED BY THE CITY ENGINEER

② WHEN LOCATING STREET LIGHTING ALWAYS INSTALL ASSEMBLY W/MAST ARM AT RIGHT ANGLES TO STREET

③ ALWAYS LOCATE STREET LIGHT IN CLOSE PROXIMITY TO FIRE HYDRANT.

④ THE INTERSECTION SHALL BE LIT WITH LIGHT ASS'Y LOCATED OPPOSITE ℄ OF INTERSECTING STREET. (SEE DIA-GRAM BELOW)

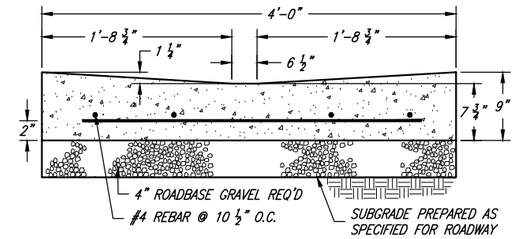

CROSS DRAIN SECTION

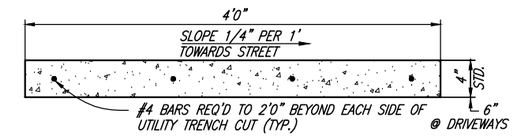

SIDEWALK SECTION

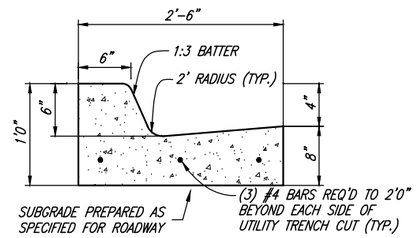

CURB & GUTTER SECTION

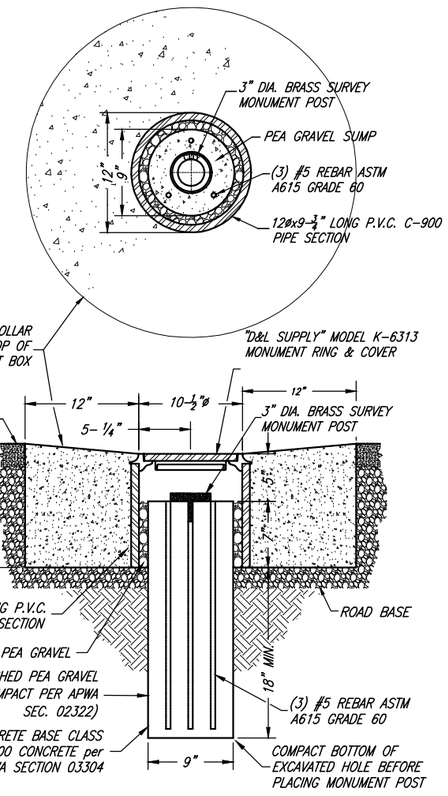

SURVEY MONUMENT DETAIL

PLATE DETAIL

ALL SIGNS AND PLACEMENT OF SIGNS SHALL CONFORM TO THE REQUIREMENTS OF THE "MANUAL ON UNIFORM TRAFFIC CONTROL DEVICES"

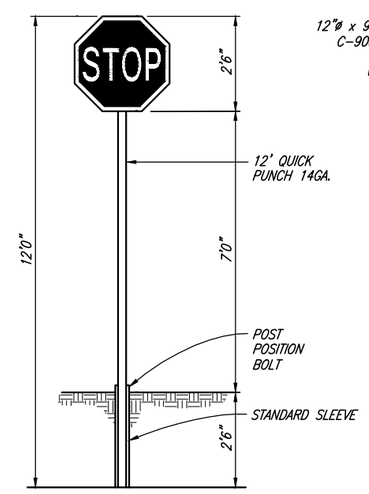

TRAFFIC SIGN & POST

TRAFFIC SIGN NOTES:

1 BACKGROUND SHALL BE GREEN, HIGH INTENSITY REFLECTIVE SHEETING 9FP-85 TYPE IIIA)
2 LEGEND SHALL BE WHITE LETTERS, HIGH INTENSITY REFLECTIVE SHEETING 9FP-85 IIIA)
3 SIGN BLANK SHALL BE 6081-T6 HEAT TREATED HIGH TENSILE DEGREASED ALUMINUM W/ALODINE 1200 FINISH-THICKNESS SHALL BE 0.08"
4 EACH SIGN SHALL CONSIST OF TWO PLATES RIVETED TOGETHER & MOUNTED AS SHOWN
5 SIGN ON PRIVATE ROADS SHALL MEET ALL SPECIFICATIONS FOR STANDARD SIGNS, EXCEPT BACKGROUND SHALL BE BLUE
6 ALL STREETS WITH NAMES MUST ALSO SHOW LOCATIONS COORDINATE DESIGNATION
7 ADDRESS COORDINATE MUST BE CONTACTED PRIOR TO MAKING SIGNS TO VERIFY PROPER NAMES AND COORDINATES

REGISTERED PROFESSIONAL ENGINEER No. 276381 CHRIS L. BRENHOLT STATE OF UTAH

PROJECT ENGINEER

FEBRUARY 2010
DATE

REV.	DATE	APPR.	
1	NOV.09	CLB	MOVED TO SHEET 4

SCALE: N.T.S.

DESIGNED KLJ
DRAWN EDH
CHECKED CLB

JONES & ASSOCIATES
CONSULTING ENGINEERS
1716 East 5600 South
South Ogden, Utah 84403 (801) 476-9767

TREMONTON CITY CORPORATION
PUBLIC WORKS STANDARDS

STANDARD STREET INTERSECTION DETAILS

SHEET: 4 OF 21 SHEETS

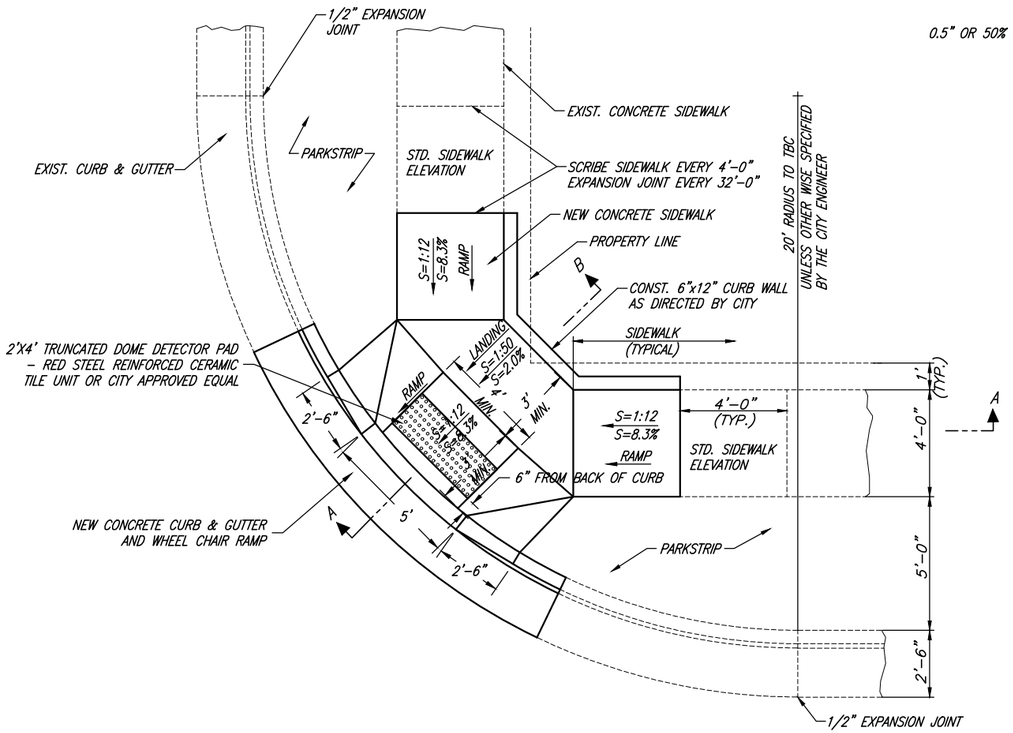

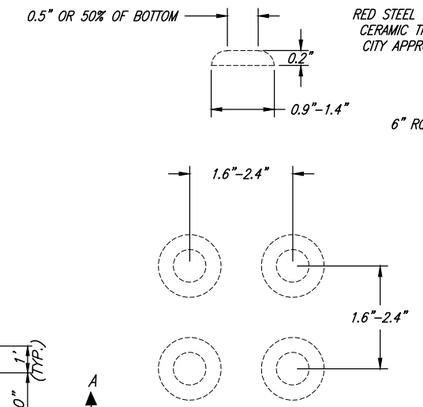

NOTES:
1. LOCATE DETECTABLE WARNINGS SO THAT THE EDGE NEAREST THE BACK OF CURB OR OTHER POTENTIAL HAZARD IS 6 INCHES FROM THE BACK OF CURB OR OTHER POTENTIAL HAZARD. PROVIDE 2-FOOT MINIMUM DEPTH.

SEE FIGURE FOR TRUNCATED DOME SIZE AND SPACING DIMENSION DETAILS.

TRUNCATED DOME DETAIL

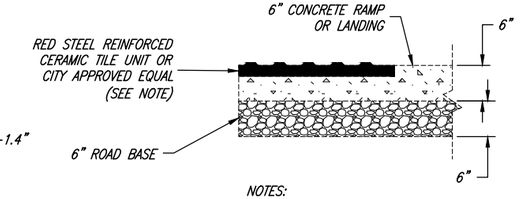

NOTES:
1. INSTALLATION SHALL BE IN ACCORDANCE WITH MANUFACTURER'S RECOMMENDATIONS.

TILE DETAIL

GENERAL NOTES:
A. THE DETECTABLE WARNING SURFACE DOMES SHALL BE ORIENTED SUCH THAT THE ROWS ARE PARALLEL WITH THE DIRECTION OF PEDESTRIAN TRAVEL TO THE RAMP ON THE OPPOSITE SIDE OF THE STREET.

B. THE COLOR FOR THE DETECTABLE WARNING SURFACE SHALL BE RED IN COLOR AS APPROVED BY THE CITY OR AUTHORIZED REPRESENTATIVE.

C. WHEN A DETECTABLE WARNING SURFACE DOME IS CUT, THE REMAINING PORTION OF THE DOME SHALL BE BEVELED TO A MAXIMUM SLOPE OF 1:2.

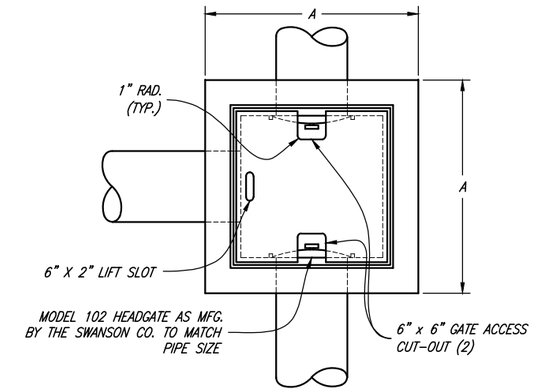

PLAN

DIMENSION	TYPE I	TYPE II
A	3'-0"	4'-0"
B	2'-1 1/2"	3'-1 1/2"
C	2'-1"	3'-1"
D	2'-0"	3'-0"

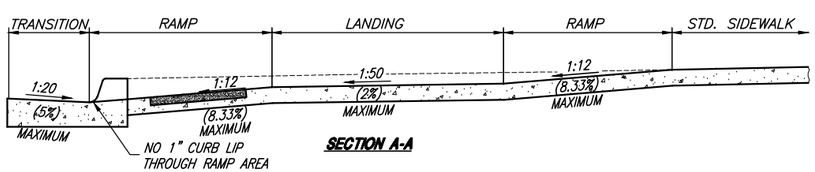

SECTION A-A

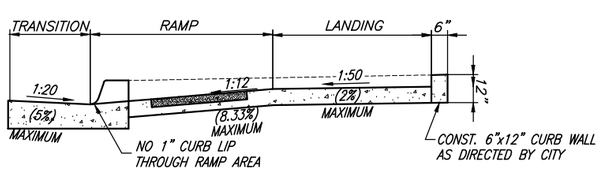

SECTION A-B

TYPICAL WHEEL CHAIR RAMP

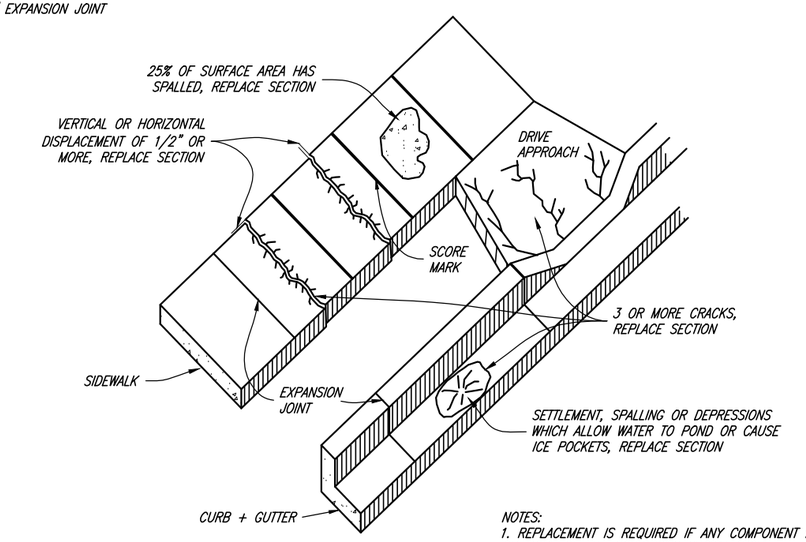

NOTES:
1. REPLACEMENT IS REQUIRED IF ANY COMPONENT HAS ONE OR MORE OF THE CONDITIONS SHOWN ABOVE.
2. ANYTIME CONCRETE IS CUT TO REPLACE A DEFECTIVE COMPONENT, THE CUT SHOULD EXTEND COMPLETELY THROUGH THE PIECE BEING REPLACED.

DEFECTIVE CONCRETE REPLACEMENT CRITERIA

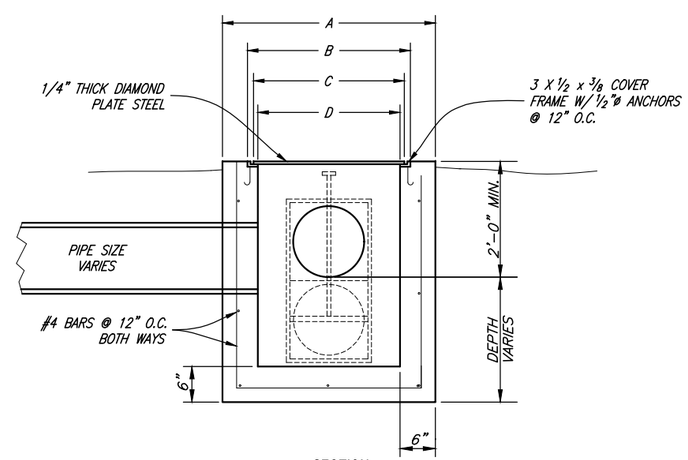

SECTION

NOTES:
1. PIPE MATERIALS & SIZE SHALL BE APPROVED BY IRRIGATION COMPANY.
2. HORIZONTAL & VERTICAL ALIGNMENT TO BE APPROVED BY BRIGHAM CITY.

IRRIGATION BOX

REGISTERED PROFESSIONAL ENGINEER No. 276381 CHRIS L. BRENHOLT STATE OF UTAH

PROJECT ENGINEER

FEBRUARY 2010
DATE

REV.	DATE	APPR.	
1	NOV.09	CLB	MOVED TO SHEET 5

SCALE: N.T.S.

DESIGNED KLJ
DRAWN EDH
CHECKED CLB

JA JONES & ASSOCIATES
CONSULTING ENGINEERS
1716 East 5600 South
South Ogden, Utah 84403 (801) 476-9767

TREMONTON CITY CORPORATION
PUBLIC WORKS STANDARDS
TYPICAL WHEELCHAIR RAMP

SHEET: 5 OF 21 SHEETS

NOTES:

1. THE CIRCULAR CUL-DE-SAC LAYOUT SHOWN ON THIS SHEET IS TO BE CONSIDERED AS THE CITY STANDARD DESIGN. OTHER ALTERNATE DESIGNS MAY BE CONSIDERED AS APPROVED BY THE CITY ENGINEER.

2. CUL-DE-SACS WITH A NEGATIVE GRADE PROGRESSING TOWARD THE TURNAROUND SHALL BE LIMITED TO A MAXIMUM GRADE OF SIX (6) PERCENT. THE CUL-DE-SAC SHALL TERMINATE WITH A GRADE OF NOT TO EXCEED THREE (3) PERCENT FOR THE LAST ONE HUNDRED (100) FEET OF TRAVELED SURFACE. THE CUL-DE-SAC SHALL HAVE ADEQUATE CURB, GUTTER, AND EASEMENT FOR DRAINAGE.

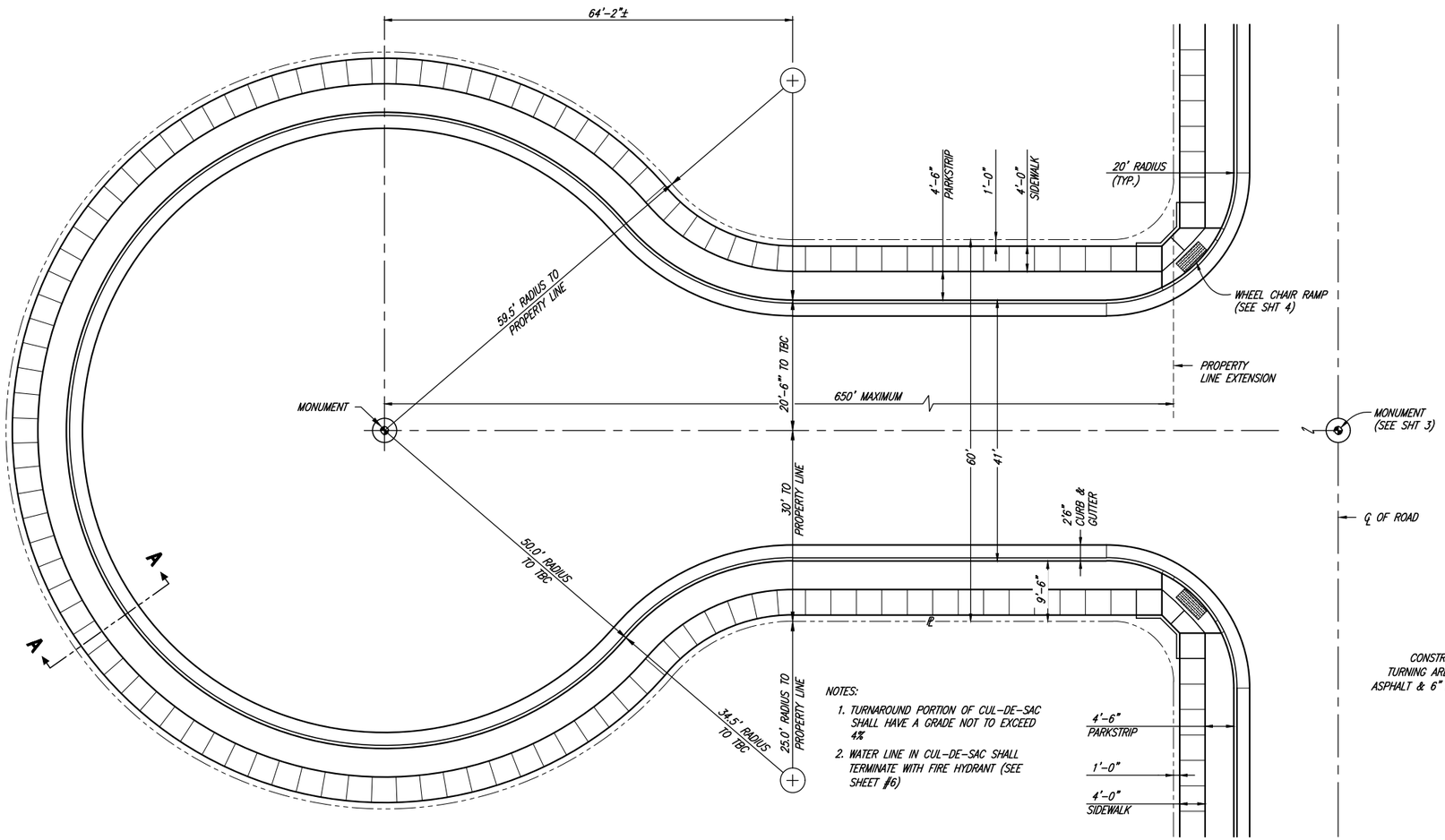

NOTES:

1. TURNAROUND PORTION OF CUL-DE-SAC SHALL HAVE A GRADE NOT TO EXCEED 4%
2. WATER LINE IN CUL-DE-SAC SHALL TERMINATE WITH FIRE HYDRANT (SEE SHEET #6)

CUL-DE-SAC

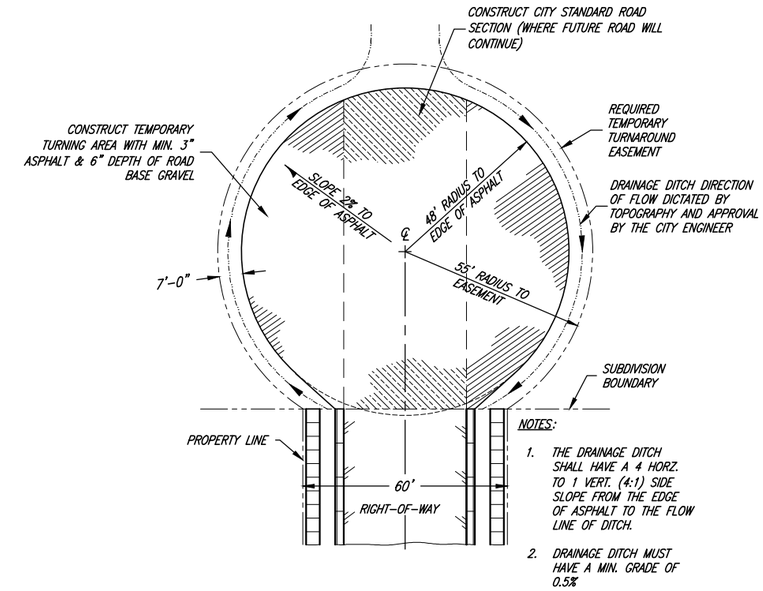

NOTES:

1. THE DRAINAGE DITCH SHALL HAVE A 4 HORZ. TO 1 VERT. (4:1) SIDE SLOPE FROM THE EDGE OF ASPHALT TO THE FLOW LINE OF DITCH.
2. DRAINAGE DITCH MUST HAVE A MIN. GRADE OF 0.5%

TEMPORARY TURNAROUND

TEMPORARY TURNAROUND NOTE:

WHEN TURNAROUND CANNOT BE CONSTRUCTED OUTSIDE OF THE SUBDIVISION, IT SHALL BE LOCATED ON A PORTION OF THE SUBDIVISION LOTS (AS NEEDED) WITH THE SUBDIVIDER PLACING IN ESCROW AN AMOUNT OF MONEY SUFFICIENT TO COMPLETE THE STREET IMPROVEMENTS TO THE SUBDIVISION BOUNDARY. THESE FUNDS WILL BE USED AT SUCH TIME THE STREET IS EXTENDED.

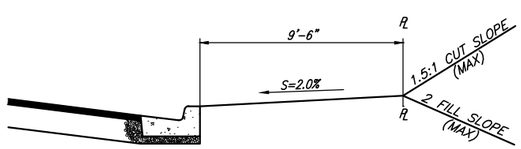

SECTION A-A

REQUIRED GRADING BETWEEN TBC AND PROPERTY LINE

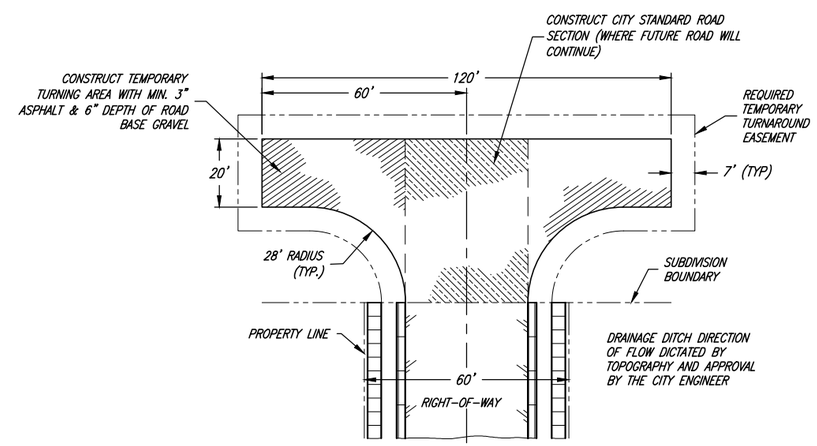

ALTERNATE TEMPORARY TURNAROUND

120' HAMMERHEAD DETAIL

REGISTERED PROFESSIONAL ENGINEER No. 276381 CHRIS L. BRENNOLT STATE OF UTAH

PROJECT ENGINEER

FEBRUARY 2010
DATE

REV.	DATE	APPR.	
1	NOV.09	CLB	MOVED TO SHEET 6, REMOVED THE LETTER "C" IN NOTE 1

SCALE: N.T.S.

DESIGNED KLJ
DRAWN EDH
CHECKED CLB

JONES & ASSOCIATES CONSULTING ENGINEERS
1716 East 5600 South
South Ogden, Utah 84403 (801) 476-9767

TREMONTON CITY CORPORATION
PUBLIC WORKS STANDARDS

CUL-DE-SAC DETAILS

SHEET: 6 OF 21 SHEETS

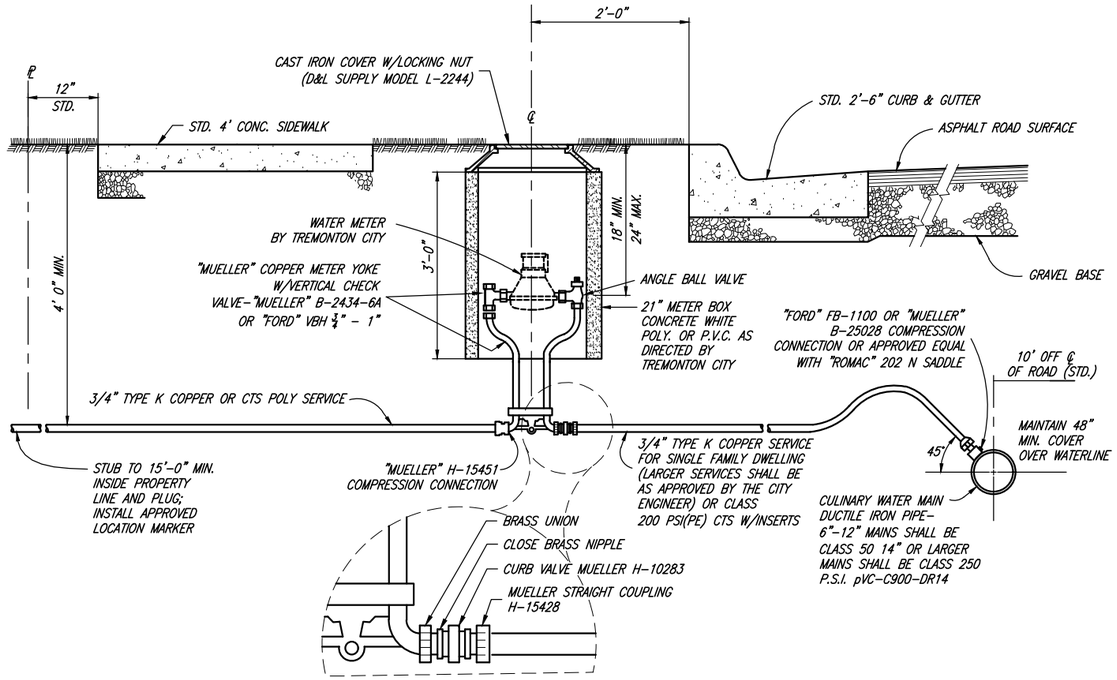

TYPICAL CULINARY WATER SERVICE CONNECTION

THRUST PER P.S.I. OF WATER PRESSURE AT VARIOUS FITTINGS

PIPE SIZE	DEAD END OR TEE	90° ELBOW	45° ELBOW	22 1/2° ELBOW
4	19	27	15	7
6	39	55	30	15
8	67	94	51	26
10	109	154	84	43
12	155	218	119	61
14	210	296	161	82
16	272	383	209	106
18	351	494	269	137
20	434	611	333	169
24	623	878	478	244

EXAMPLE:

8-INCH 90° ELBOW, PRESSURE 200 LB./SQ. IN.
FROM TABLE : THRUST = 94 x 200 = 18,800 LB.
ASSUME BEARING STRENGTH OF SOIL = 2000 LB./SQ. FT.

$\frac{18,800}{2,000}$ = 9.4 SQ. FT. AREA OF BEARING REQUIRED FOR THRUST BLOCK

NOTES:

1. IN USING THE ABOVE TABLES, USE THE MAXIMUM INTERNAL PRESSURE ANTICIPATED (I.E. HYDROSTATIC TEST PRESSURE, POSSIBLE SURGE PRESSURE DUE TO PUMP SHUT OFF, ETC.).
2. SEE SOILS REPORT FOR BEARING STRENGTH OF SOIL. IN THE ABSENCE OF A SOILS REPORT, AN AVERAGE SOIL (SPADABLE MEDIUM CLAY) CAN BE ASSUMED TO HAVE A BEARING STRENGTH OF 2000 P.S.F.

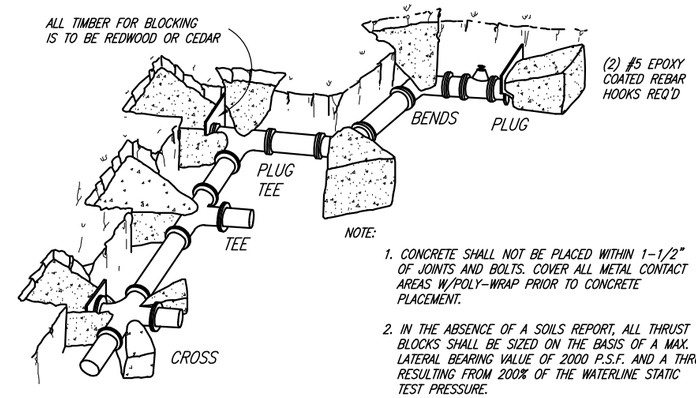

THRUST BLOCKING

NOTE:

1. CONCRETE SHALL NOT BE PLACED WITHIN 1-1/2" OF JOINTS AND BOLTS. COVER ALL METAL CONTACT AREAS W/POLY-WRAP PRIOR TO CONCRETE PLACEMENT.
2. IN THE ABSENCE OF A SOILS REPORT, ALL THRUST BLOCKS SHALL BE SIZED ON THE BASIS OF A MAX. LATERAL BEARING VALUE OF 2000 P.S.F. AND A THRUST RESULTING FROM 200% OF THE WATERLINE STATIC TEST PRESSURE.
3. THRUST BLOCKS ARE REQ'D. AT ALL BENDS OF 22-1/2" OR MORE.
4. CONCRETE SHALL HAVE A COMPRESSIVE STRENGTH OF NOT LESS THAN 2500 PSI IN 28 DAYS.

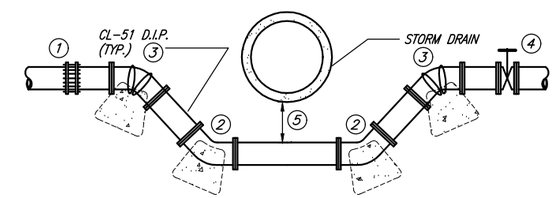

1. TRANSITION COUPLING; ROCKWELL MODEL 441 OR ROMAC MODEL 501.
2. MJ 45° BEND W/RETAINER GLANDS.
3. CONSTRUCT THRUST BLOCKS AT EACH 45° BEND W/(3) #6 REBARS SECURING BLOCK TO FITTING (EPOXY COATING).
4. FURNISH & INSTALL MJ GATE VALVE & BOX.
5. MINIMUM OF 12" COVER BETWEEN THE WATERLINE AND STORM DRAIN PIPE TO BE CROSSED.

TYPICAL WATERLINE LOOP

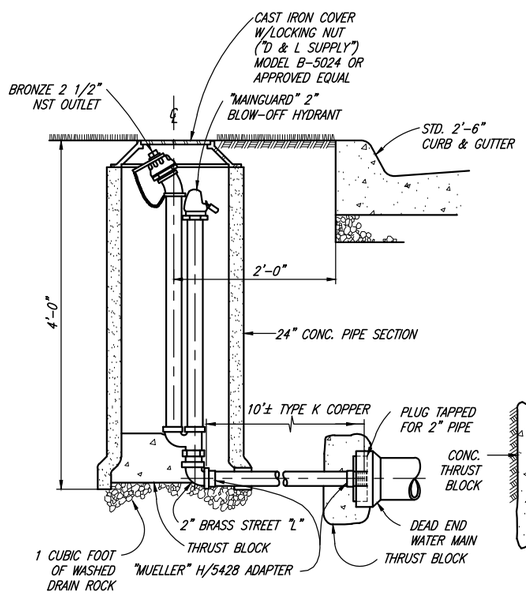

TYPICAL FLUSH VALVE CONNECTION

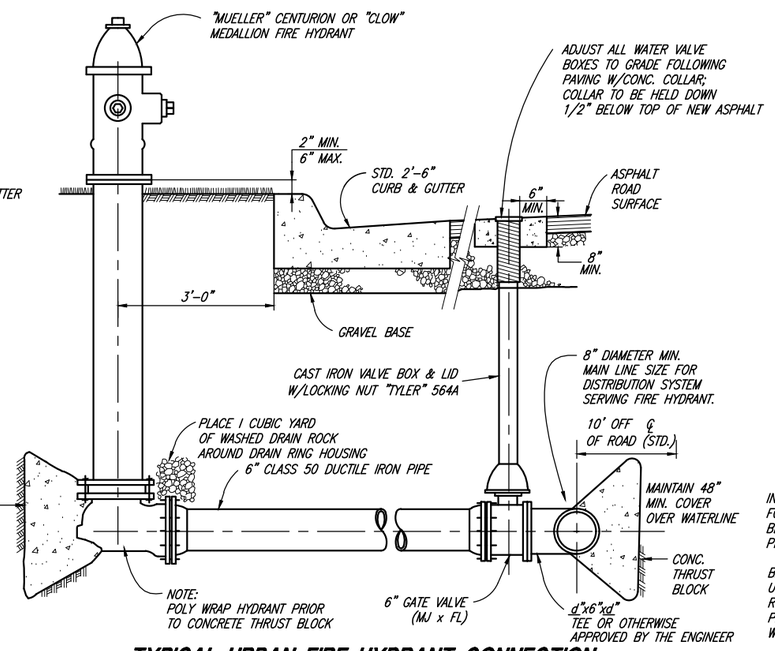

TYPICAL URBAN FIRE HYDRANT CONNECTION

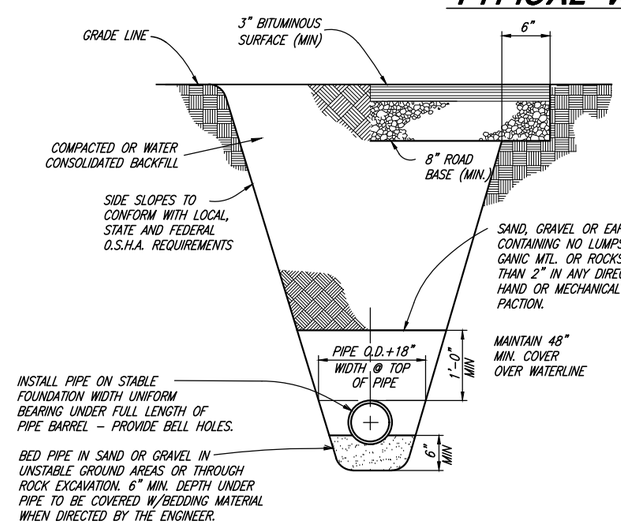

TYPICAL TRENCH SECTION

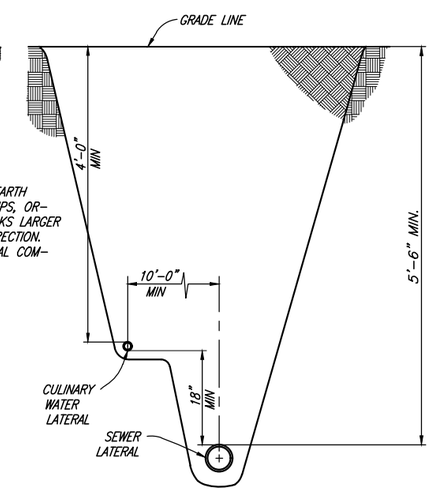

COMBINED WATER & SEWER LATERAL SECTION

REGISTERED PROFESSIONAL ENGINEER No. 276381 CHRIS L. BRENHOLT STATE OF UTAH

PROJECT ENGINEER

FEBRUARY 2010
DATE

REV.	DATE	APPR.	
1	NOV.09	CLB	MOVED TO SHEET 7

SCALE: N.T.S.

DESIGNED KLJ
DRAWN EDH
CHECKED CLB

JA JONES & ASSOCIATES
CONSULTING ENGINEERS
1716 East 5600 South
South Ogden, Utah 84403 (801) 476-9767

TREMONTON CITY CORPORATION
PUBLIC WORKS STANDARDS

FIRE HYDRANT & WATER SERVICE CONNECTIONS

SHEET: 7 OF 21 SHEETS

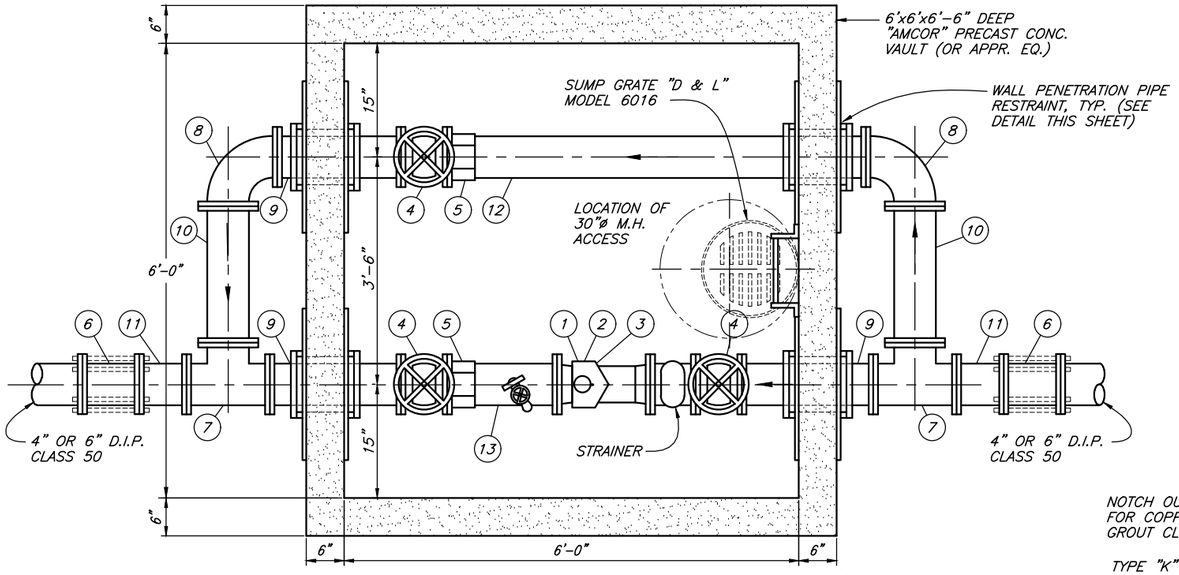

PLAN

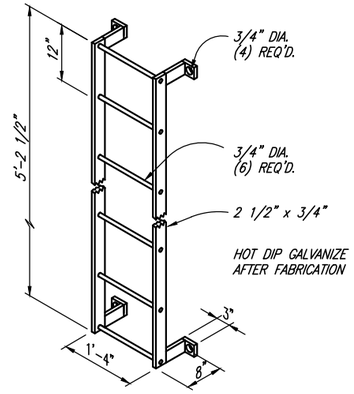

LADDER DETAIL

PIPE & FITTING SCHEDULE

NO.	DESCRIPTION (3",4" & 6" METER STA.)	JOINT TYPE	3" LINE	4" LINE	6" LINE
1	"MASTER METER" DUAL BODY COMPOUND METER W/STRAINER	FL	3"	–	–
2	"MASTER METER" DUAL BODY COMPOUND METER W/STRAINER	FL	–	4"	–
3	"MASTER METER" DUAL BODY COMPOUND METER W/STRAINER	FL	–	4"	6"
4	GATE VALVE	FL	3"	4"	6"
5	"ROMAC" FCA501 FLANGED COUPLING ADAPTER	FLxPE	3"	4"	6"
6	"ROMAC" 501 FLEXIBLE PIPE COUPLING	FLxPE	3"	4"	6"
7	TEE	FL	3"	4"	6"
8	90° ELBOW	FL	3"	4"	6"
9	SPOOL PIECE	FL	3"x24"	4"x24"	6"x24"
10	SPOOL PIECE	FL	3"x31"	4"x29"	6"x26"
11	NIPPLE	FLxPE	3"x12"	4"x12"	6"x12"
12	NIPPLE	FLxPE	3"x74"	4"x74"	6"x74"
13	NIPPLE	FLxPE	3"x23"	4"x19"	6"x12 3/8"

NO.	DESCRIPTION (1 1/2" & 2" METER STA.)	JOINT TYPE	1 1/2" LINE	2" LINE
16	"MASTER METER" DUAL BODY COMPOUND METER W/STRAINER	FL	1 1/2"	2"
17	"MUELLER" B-2423-2 METER YOKE (18" HEIGHT)	–	1 1/2"	2"
18	"MUELLER" 110 COMPRESSION CONN. COUPLING	–	1 1/2"	2"

GENERAL NOTES:

1. PROPERTY OWNER OR CONTRACTOR SHALL PAY FOR ALL COSTS OF INSTALLATION INCLUDING ALL MATERIALS, ALL EXCAVATION AND FILL, ASPHALT REPLACEMENT AND WATER MAIN CONNECTION.
2. INSPECTION OF ALL WATER LINE INSTALLATIONS WILL BE DONE BY TREMONTON CITY WATER DEPT., WITH A 48 HOUR MINIMUM NOTICE REQUIRED PRIOR TO START OF WORK.
3. IF APPLICABLE, A TREMONTON CITY CUT PERMIT MUST BE REQUESTED AND APPROVED PRIOR TO START OF WORK.

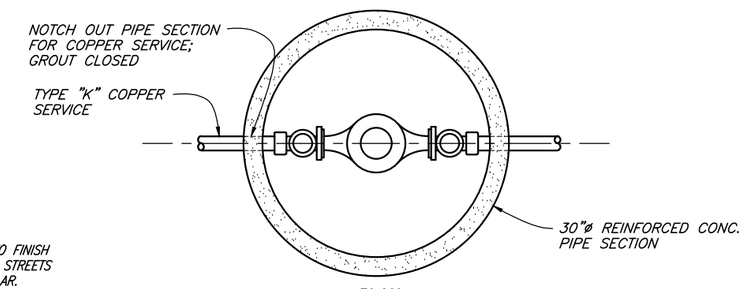

PLAN

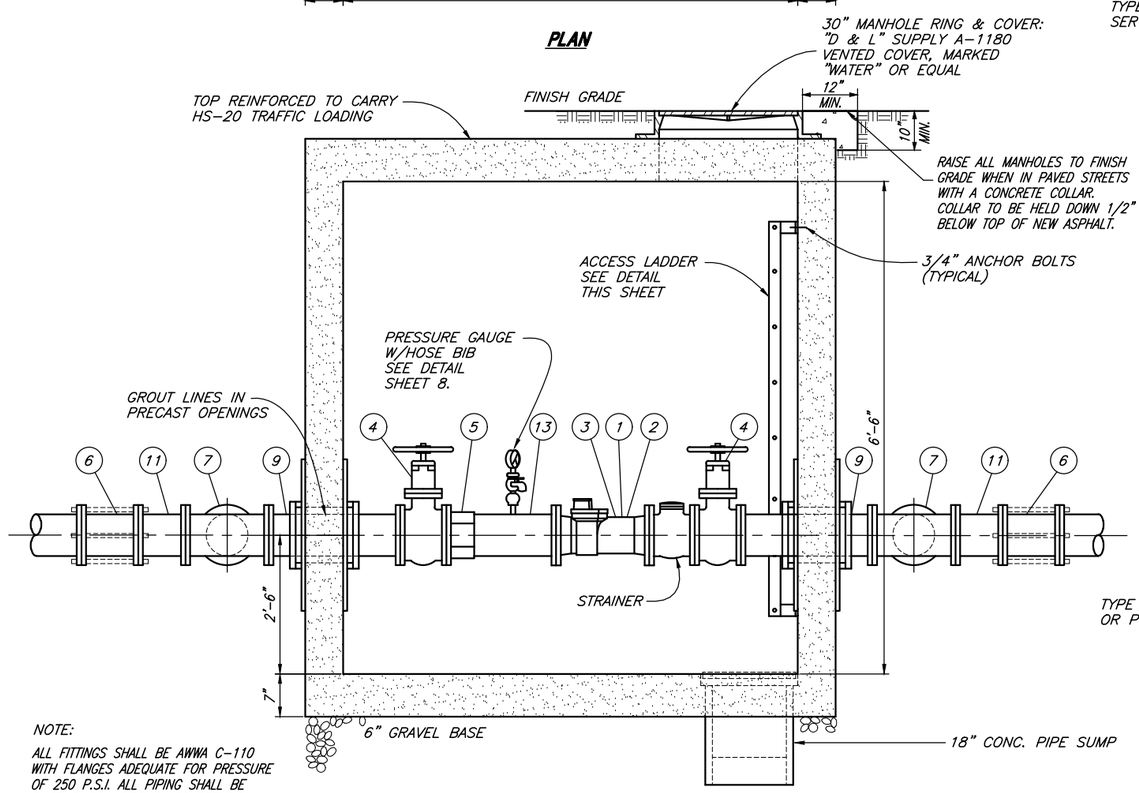

NOTE:

ALL FITTINGS SHALL BE AWWA C-110 WITH FLANGES ADEQUATE FOR PRESSURE OF 250 P.S.I. ALL PIPING SHALL BE DUCTILE IRON PIPE-CLASS 350 P.S.I. MIN.

SECTION

3", 4" & 6" WATER METER STATION

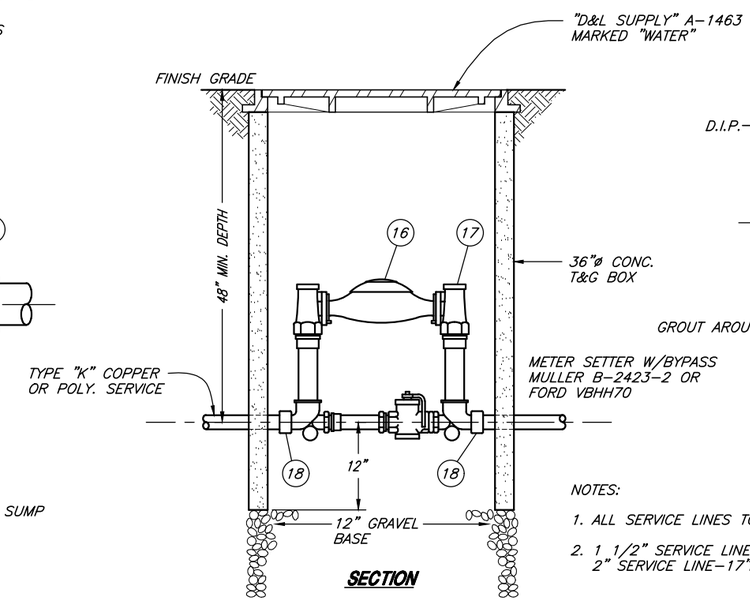

SECTION

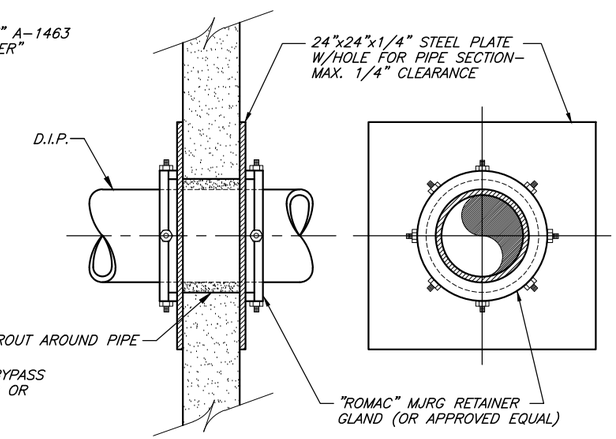

WALL PENETRATION DETAIL

NOTES:

1. ALL SERVICE LINES TO AND FROM METER SHALL BE TYPE "K" COPPER.
2. 1 1/2" SERVICE LINE-13"METER
   2" SERVICE LINE-17"METER

1 1/2" & 2" WATER METER STATION

REGISTERED PROFESSIONAL ENGINEER No. 276361 CHRIS L. BRENNOLT STATE OF UTAH

PROJECT ENGINEER

FEBRUARY 2010
DATE

REV.	DATE	APPR.	
1	NOV.09	CLB	MOVED TO SHEET 8, ADDED CONCRETE COLLAR

SCALE: N.T.S.

DESIGNED KLJ
DRAWN EDH
CHECKED CLB

JONES & ASSOCIATES
CONSULTING ENGINEERS
1716 East 5600 South
South Ogden, Utah 84403 (801) 476-9767

TREMONTON CITY CORPORATION
PUBLIC WORKS STANDARDS

TYPICAL WATER METER STATIONS

SHEET: 8 OF 21 SHEETS

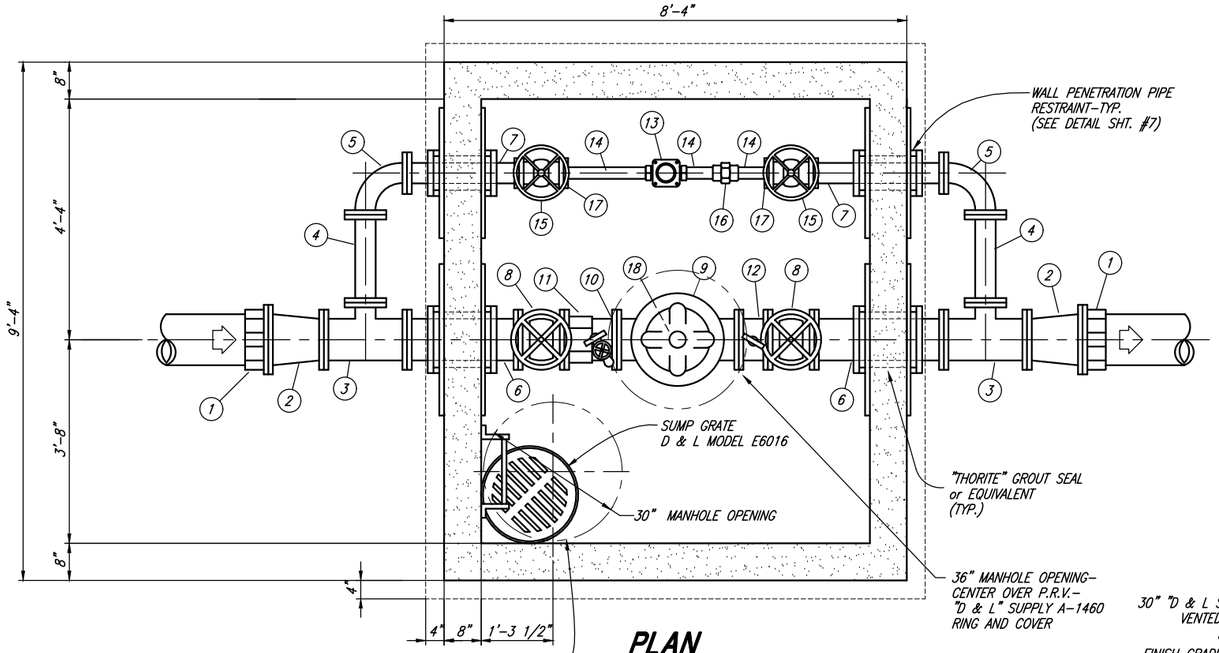

PLAN

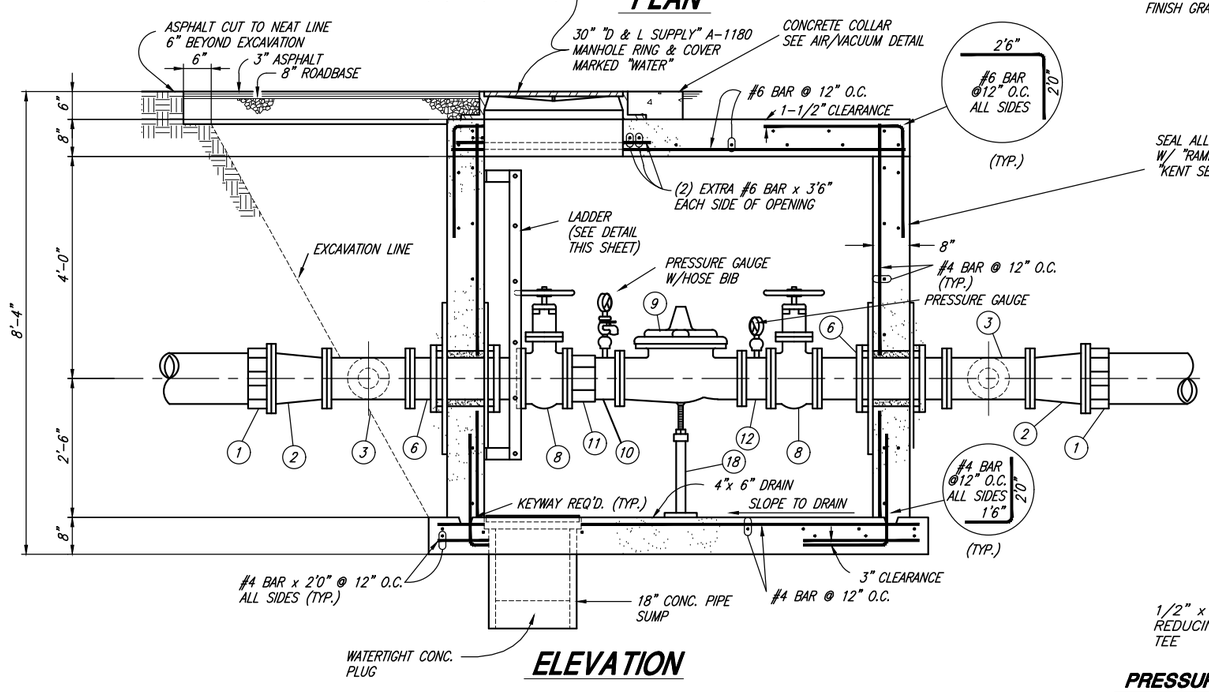

ELEVATION

PRESSURE REDUCTION STATION

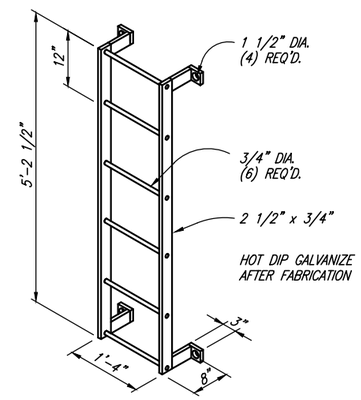

LADDER DETAIL

PIPE & FITTING SCHEDULE

NO.	DESCRIPTION	JOINT TYPE	6" LINE	8" LINE	10" LINE
1	CAST FLANGED COUPLING ADAPTOR (2)	FLxPE	6"	8"	10"
2	REDUCER (2)	FL	6"x4"	8"x6"	10"x8"
3	REDUCING TEE (2)	FL	4"x4"x4"	6"x6"x4"	8"x8"x4"
4	SPOOL PIECE (2)	FL	4"	4"	4"
5	90° ELBOW (2)	FL	4"	4"	4"
6	WALL SPOOL PIECE (2)	FL	4"	6"	8"
7	WALL SPOOL PIECE (2)	FL	4"	4"	4"
8	GATE VALVE (2)	FL	4"	6"	8"
9	PRESSURE REDUCTION VALVE ("CLAYTON")	FL	4"	6"	8"
10	NIPPLE	FLxPE	4"	6"	8"
11	CAST FLANGED COUPLING ADAPTER	FLxPE	4"	6"	8"
12	SPOOL PIECE	FL	4"	6"	8"
13	PRESSURE REDUCTION VALVE ("CLAYTON")	FL	2"	2 1/2"	2 1/2"
14	GALVANIZED PIPE (3)	FL	2"	2 1/2"	2 1/2"
15	GATE VALVE (2)	FL	4"	4"	4"
16	GALVANIZED UNION	FL	2"	2 1/2"	2 1/2"
17	BLIND FLANGE W/THR. CONNECTION (2)	FL	4"x2"	4"x2 1/2"	4"x2 1/2"
18	ADJUSTABLE PIPE SUPPORT (CLOW F-1608 OR EQUIVALENT)	–	–	–	–

NOTE – STRUCTURE, PIPING & VALVE SIZES FOR P.R.V. STATIONS ON LINE SIZES GREATER THAN 10" SHALL BE SPECIFIED BY THE CITY ENGINEER.

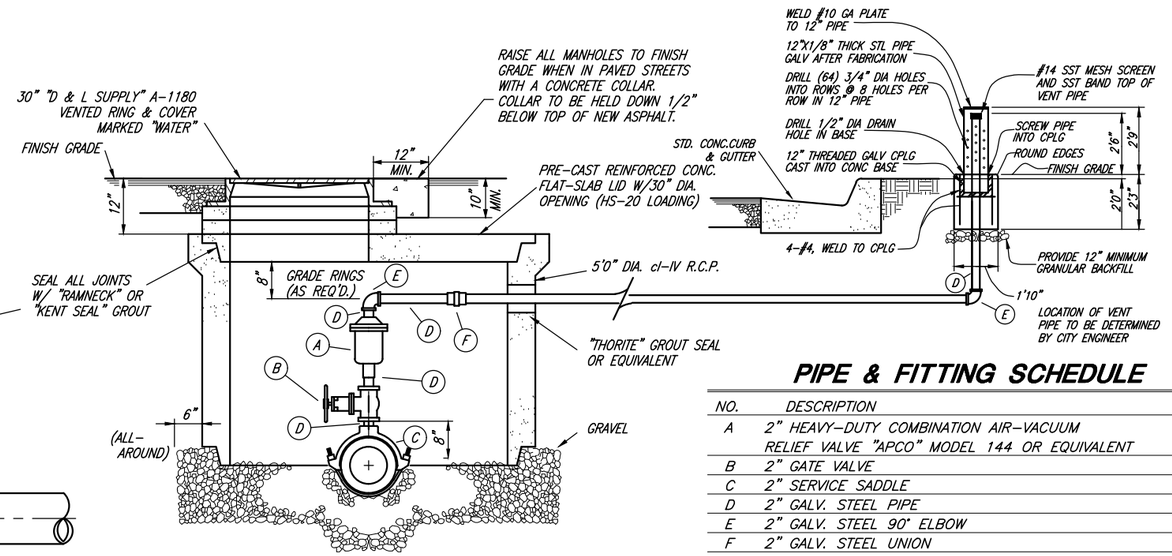

AIR/VACUUM RELIEF STATION

PIPE & FITTING SCHEDULE

NO.	DESCRIPTION	FITTING
A	2" HEAVY-DUTY COMBINATION AIR-VACUUM RELIEF VALVE "APCO" MODEL 144 OR EQUIVALENT	THR.
B	2" GATE VALVE	THR.
C	2" SERVICE SADDLE	–
D	2" GALV. STEEL PIPE	THR.
E	2" GALV. STEEL 90° ELBOW	THR.
F	2" GALV. STEEL UNION	THR.

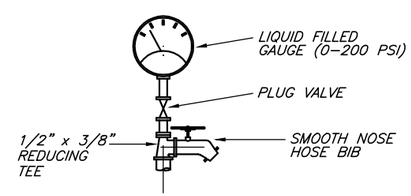

PRESSURE GAUGE W/HOSE BIB DETAIL

REGISTERED PROFESSIONAL ENGINEER No. 276381 CHRIS L. BRENHOLT STATE OF UTAH

PROJECT ENGINEER

FEBRUARY 2010
DATE

REV.	DATE	APPR.	
1	NOV.09	CLB	MOVED TO SHEET 9, ADDED CONCRETE COLLAR

SCALE: N.T.S.

DESIGNED KLJ
DRAWN EDH
CHECKED CLB

JONES & ASSOCIATES
CONSULTING ENGINEERS
1716 East 5600 South
South Ogden, Utah 84403 (801) 476-9767

TREMONTON CITY CORPORATION
PUBLIC WORKS STANDARDS

P.R.V. STATION & AIR/VACUUM RELEASE STATION

SHEET: 9 OF 21 SHEETS

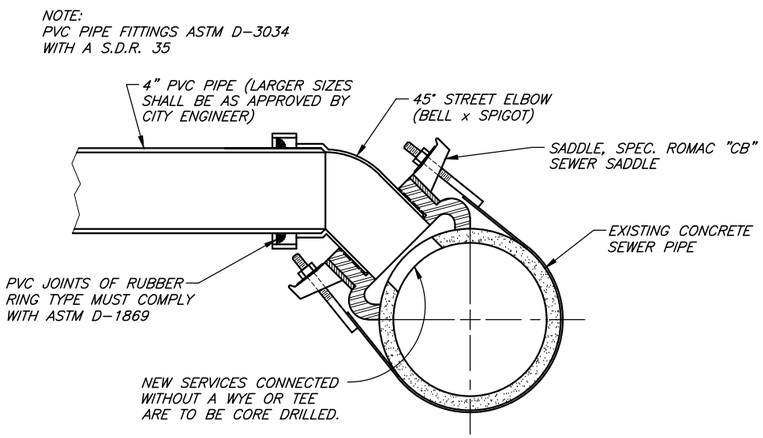

TAPPING INTO EXISTING CONCRETE PIPE

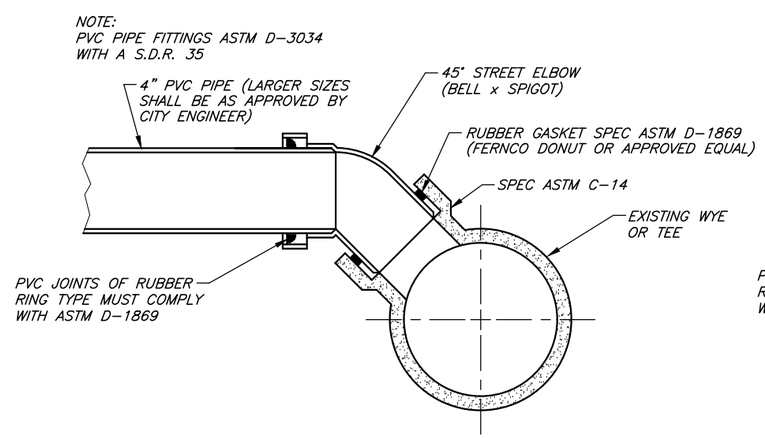

CONNECTING INTO EXISTING WYE OR TEE

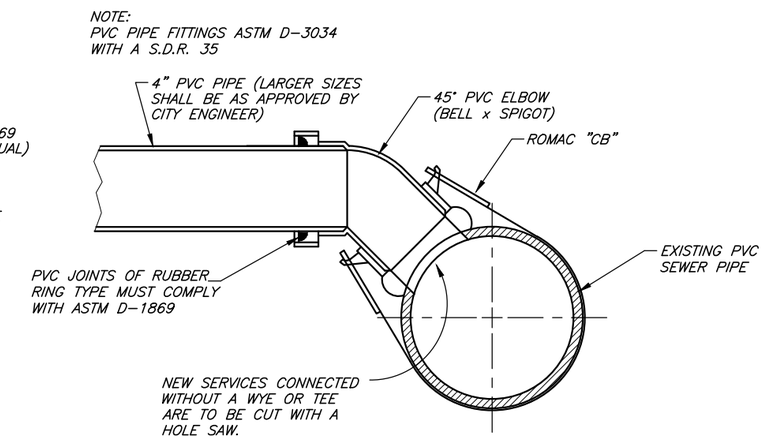

TAPPING INTO EXISTING PVC PIPE

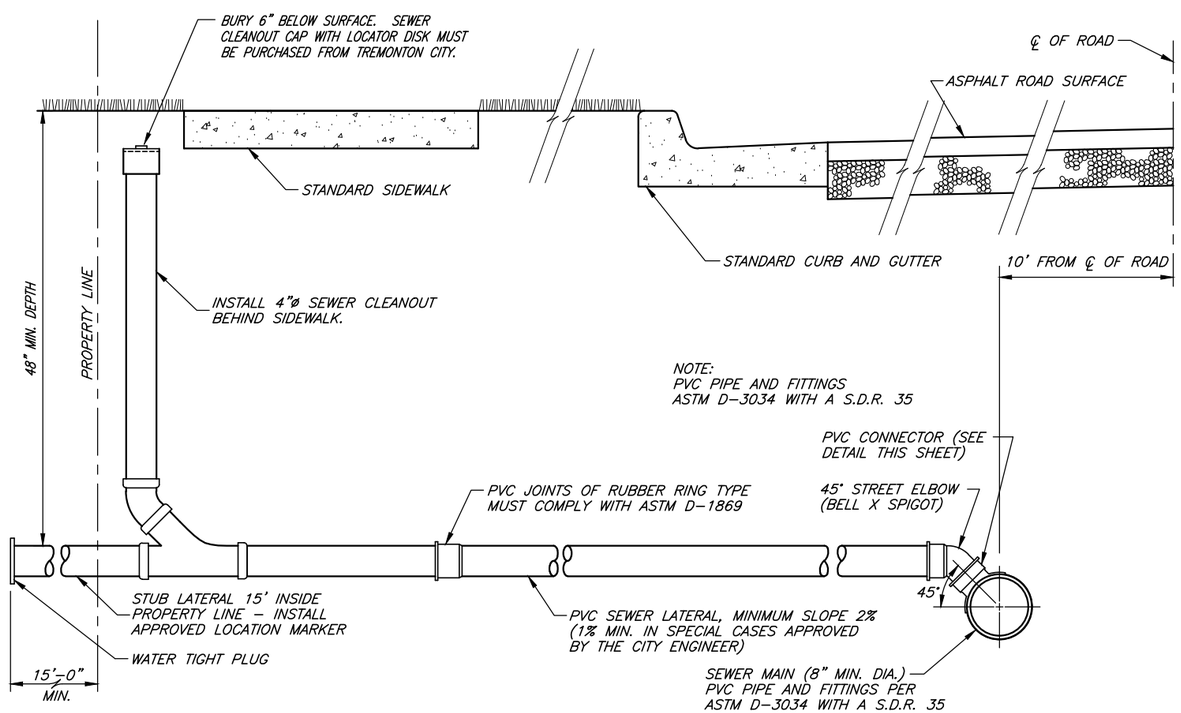

TYPICAL SEWER LATERALS CONNECTION

NOTES:

1. ALL SANITARY SEWER LATERAL CONNECTIONS ON SEWER MAINS IN NEW SUBDIVISIONS SHALL BE MADE WITH IN LINE PRE-FORMED WYES OR TEES UNLESS OTHERWISE APPROVED BY THE CITY ENGINEER.
2. FLOWLINE ELEVATION OF LATERALS SHALL EQUAL THE INSIDE TOP OF PIPE ON MAINLINE AT THE CONNECTING POINT.
3. SANITARY SEWER PIPES SHALL BE WHITE OR GREEN IN COLOR.
4. ALL SANITARY SEWER LINES SHALL BE AIR TESTED AND INSPECTED BY MEANS OF VIDEO CAMERA WHEN CONSTRUCTED.

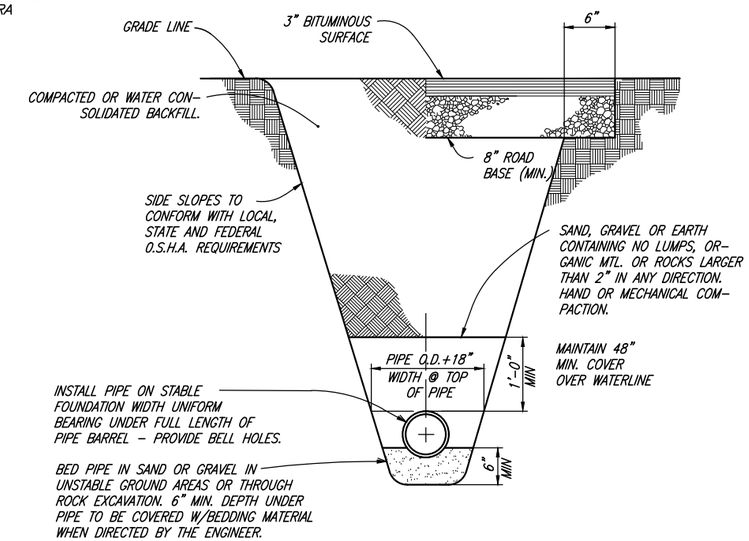

TYPICAL TRENCH SECTION

REGISTERED PROFESSIONAL ENGINEER No. 278381 CHRIS L. BRENHOLT STATE OF UTAH

PROJECT ENGINEER

FEBRUARY 2010
DATE

REV.	DATE	APPR.	
1	NOV.09	CLB	MOVED TO SHEET 10, REMOVED RESPONSIBILITY NOTE
2	NOV.09	BEB	ADD SEWER CLEANOUT W/ LOCATOR DISK ON TYP SEWER LATERALS

SCALE: N.T.S.

DESIGNED CLB
DRAWN BEB
CHECKED CLB

JA JONES & ASSOCIATES
CONSULTING ENGINEERS
1716 East 5600 South
South Ogden, Utah 84403 (801) 476-9767

TREMONTON CITY CORPORATION
PUBLIC WORKS STANDARDS

SANITARY SEWER DETAILS

SHEET: 10 OF 21 SHEETS

NOTE:
ALL SANITARY SEWER LINES SHALL BE INSPECTED BY MEANS OF VIDEO CAMERA & AIR TESTED WHEN CONSTRUCTED

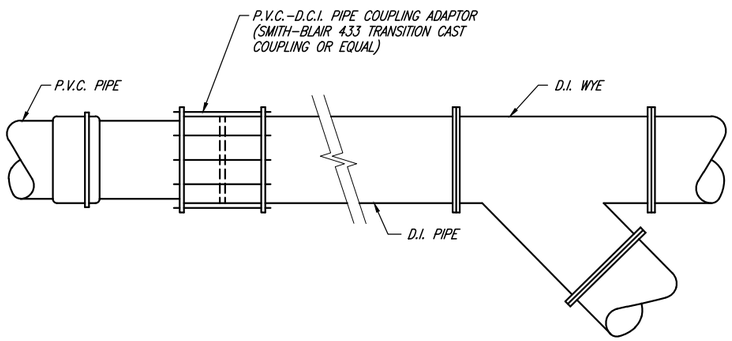

TYPICAL D.I. PIPE TO PVC PIPE CONNECTION

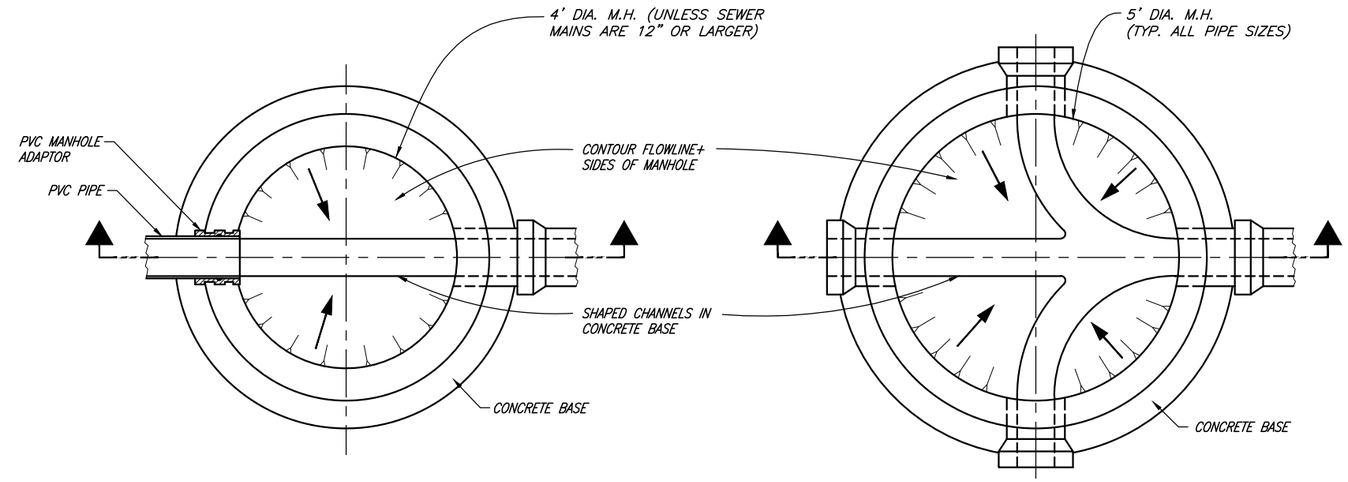

PLAN **PLAN**

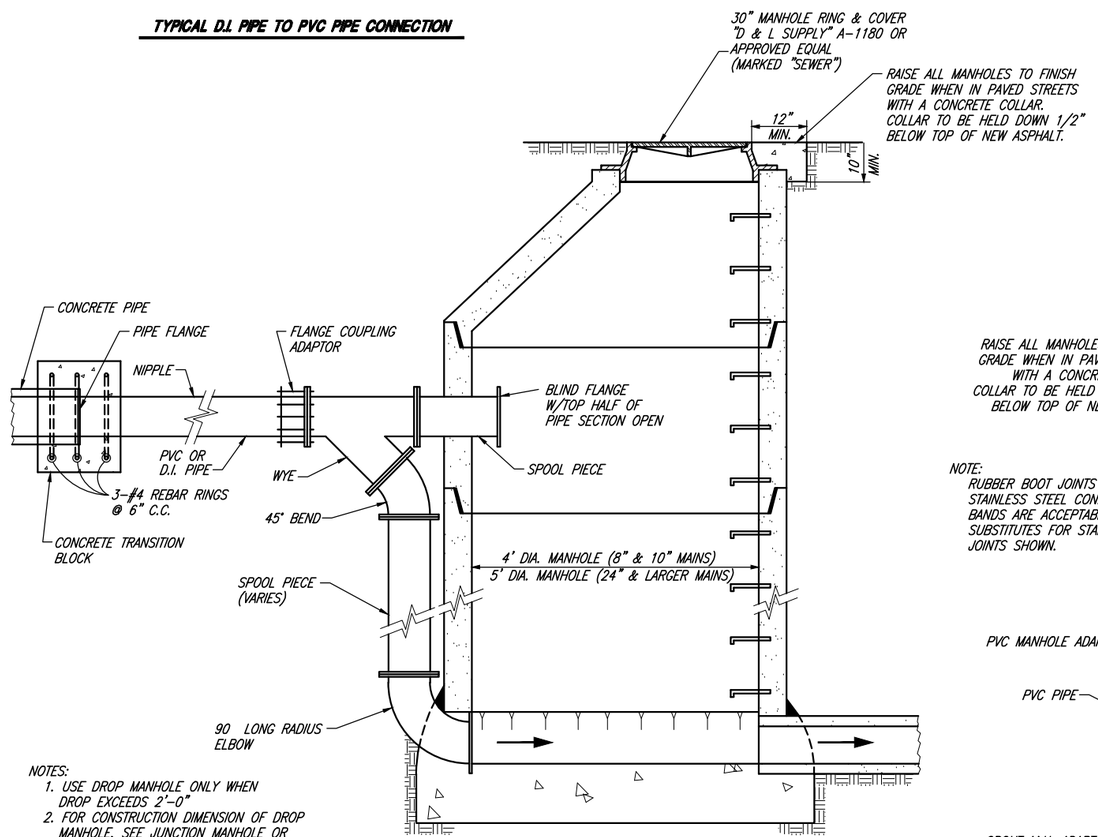

NOTES:
1. USE DROP MANHOLE ONLY WHEN DROP EXCEEDS 2'-0"
2. FOR CONSTRUCTION DIMENSION OF DROP MANHOLE, SEE JUNCTION MANHOLE OR LINE MANHOLE DETAIL THIS SHEET.
3. ALL PIPE FOR DROP MANHOLE TO BE FLANGED DUCTILE IRON PIPE, OR ALTERNATE SCH. 40 PVC.

DROP MANHOLE

TYPICAL D.I. PIPE TO CONCRETE PIPE CONNECTION

NOTE:
SECURE INVERTS IN ALL MANHOLES DURING CONSTRUCTION SO AS TO PREVENT GRAVEL AND OTHER DEBRIS FROM COLLECTING INSIDE.

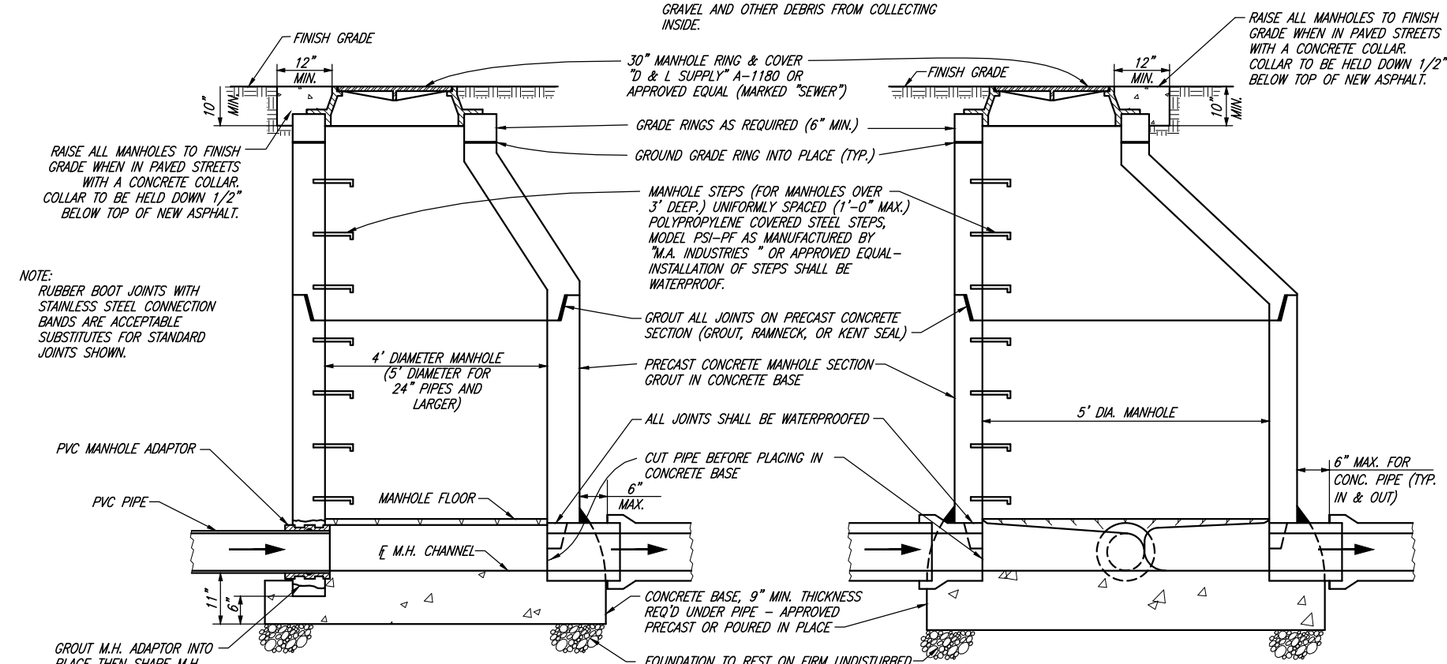

NOTE:
RUBBER BOOT JOINTS WITH STAINLESS STEEL CONNECTION BANDS ARE ACCEPTABLE SUBSTITUTES FOR STANDARD JOINTS SHOWN.

LINE MANHOLE

JUNCTION MANHOLE

REGISTERED PROFESSIONAL ENGINEER No. 276381 CHRIS L. BRENNOLT STATE OF UTAH

PROJECT ENGINEER

FEBRUARY 2010
DATE

REV.	DATE	APPR.	
1	NOV.09	CLB	MOVED TO SHEET 11, ADDED CONCRETE COLLAR

SCALE: N.T.S.

DESIGNED KLJ
DRAWN EDH
CHECKED CLB

JONES & ASSOCIATES
CONSULTING ENGINEERS
1716 East 5600 South
South Ogden, Utah 84403 (801) 476-9767

TREMONTON CITY CORPORATION
PUBLIC WORKS STANDARDS

SANITARY SEWER MANHOLE DETAILS

SHEET: 11 OF 21 SHEETS

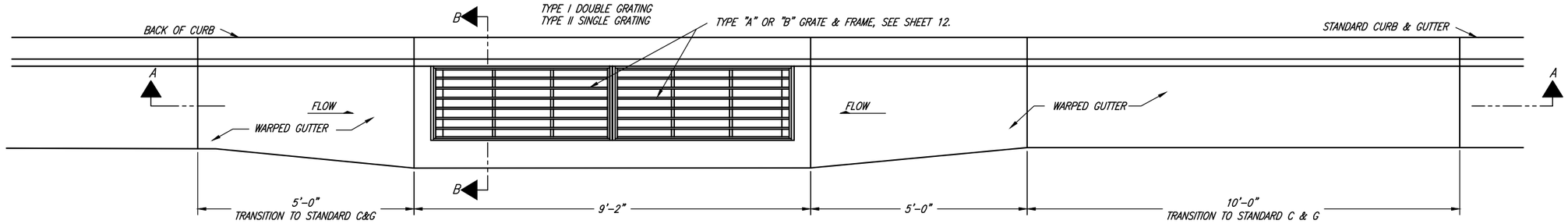

PLAN

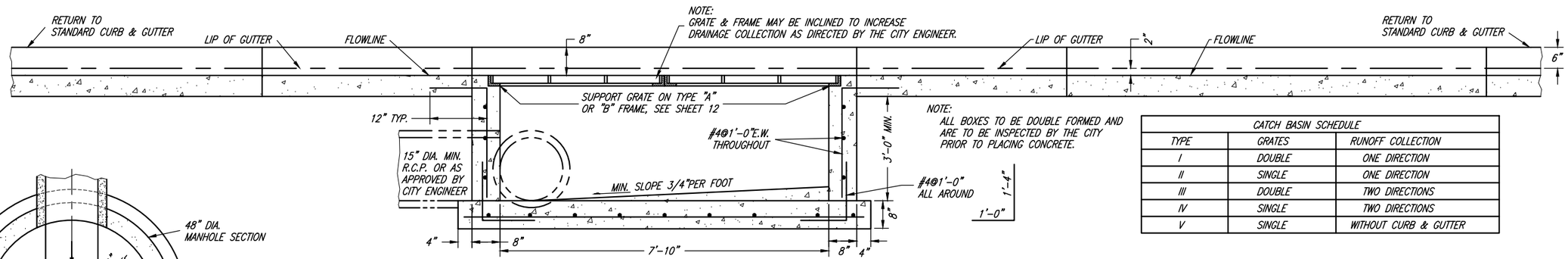

NOTE:
ALL BOXES TO BE DOUBLE FORMED AND ARE TO BE INSPECTED BY THE CITY PRIOR TO PLACING CONCRETE.

CATCH BASIN SCHEDULE		
TYPE	GRATES	RUNOFF COLLECTION
I	DOUBLE	ONE DIRECTION
II	SINGLE	ONE DIRECTION
III	DOUBLE	TWO DIRECTIONS
IV	SINGLE	TWO DIRECTIONS
V	SINGLE	WITHOUT CURB & GUTTER

SECTION A-A

TYPE I CATCH BASIN

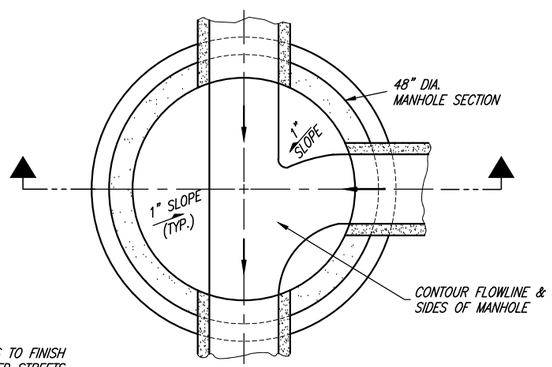

PLAN

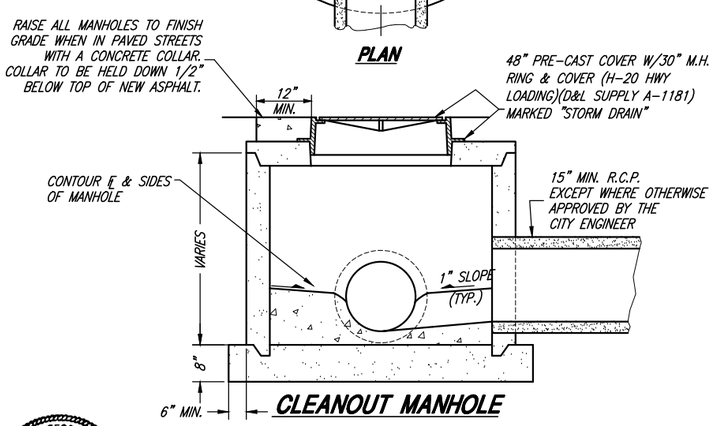

CLEANOUT MANHOLE

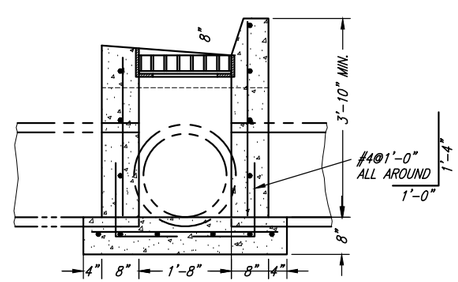

SECTION B-B

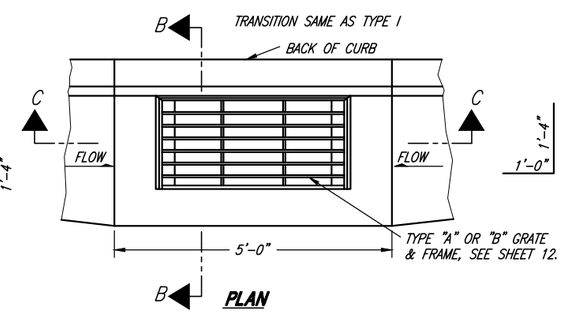

PLAN

TYPE II CATCH BASIN

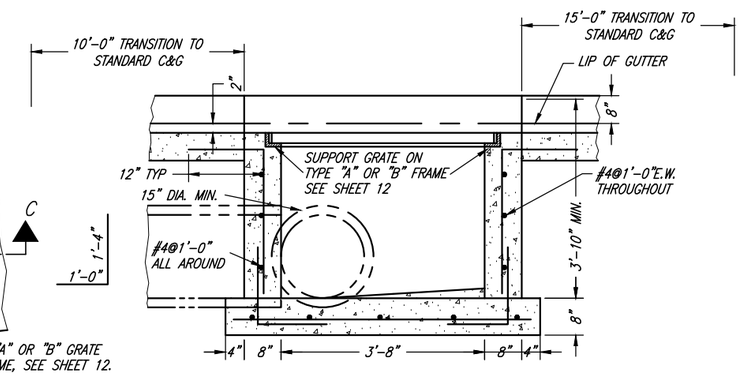

SECTION C-C

REGISTERED PROFESSIONAL ENGINEER
No. 276381
CHRIS L. BRENKHOLT
STATE OF UTAH

PROJECT ENGINEER

FEBRUARY 2010
DATE

REV.	DATE	APPR.	
1	NOV.09	CLB	MOVED TO SHEET 12, ADDED CONCRETE COLLAR

SCALE: N.T.S.

DESIGNED KLJ
DRAWN EDH
CHECKED CLB

JONES & ASSOCIATES
CONSULTING ENGINEERS
1716 East 5600 South
South Ogden, Utah 84403 (801) 476-9767

TREMONTON CITY CORPORATION
PUBLIC WORKS STANDARDS

CATCH BASINS & STORM DRAIN CLEANOUT MANHOLE

SHEET: 12 OF 21 SHEETS

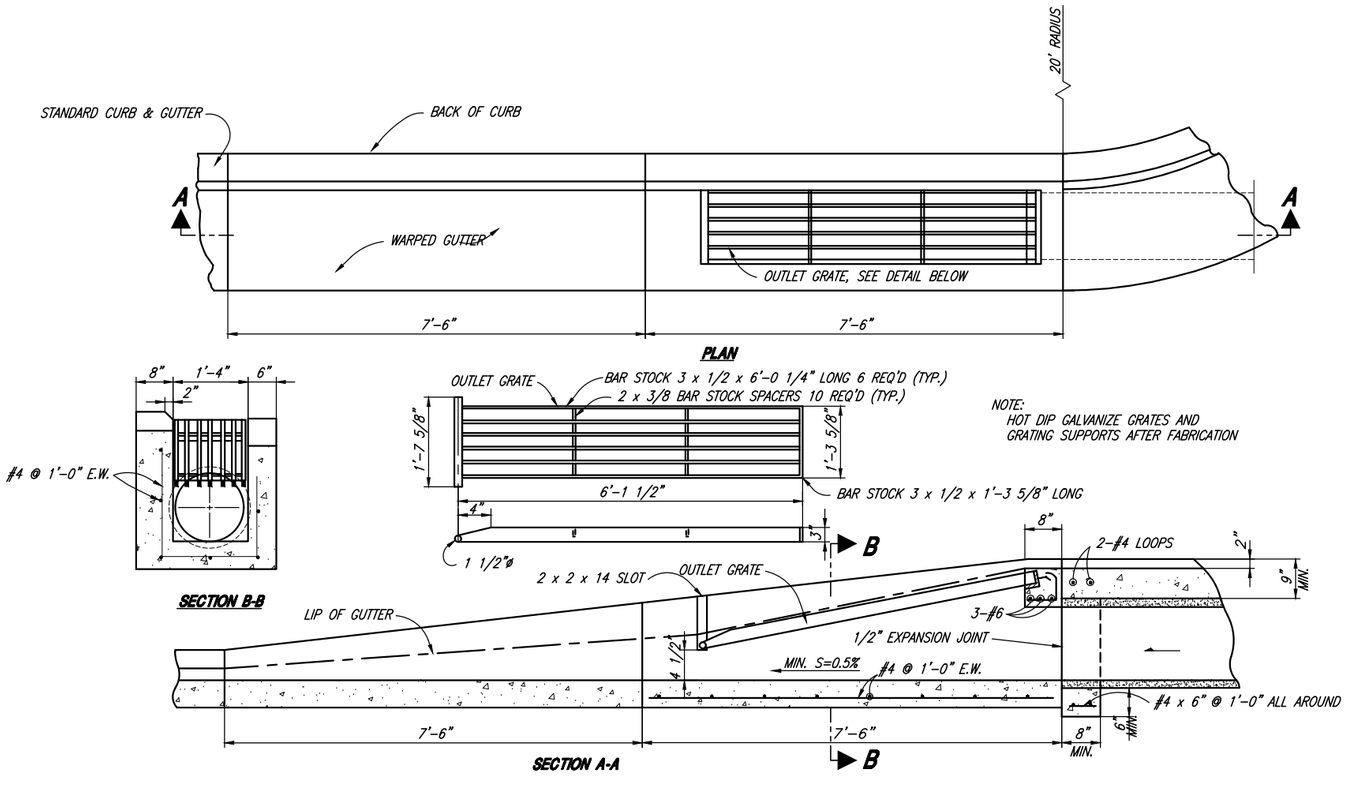

NOTE:
HOT DIP GALVANIZE GRATES AND GRATING SUPPORTS AFTER FABRICATION

OUTLET DIPSTONE

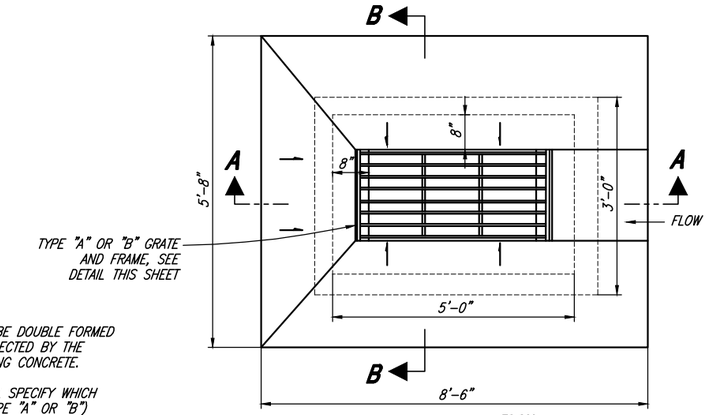

NOTES:
1. ALL BOXES ARE TO BE DOUBLE FORMED AND ARE TO BE INSPECTED BY THE CITY PRIOR TO PLACING CONCRETE.
2. CITY ENGINEER SHALL SPECIFY WHICH STANDARD GRATE (TYPE "A" OR "B") IS TO BE INSTALLED IN EACH INDIVIDUAL CATCH BASIN STRUCTURE.

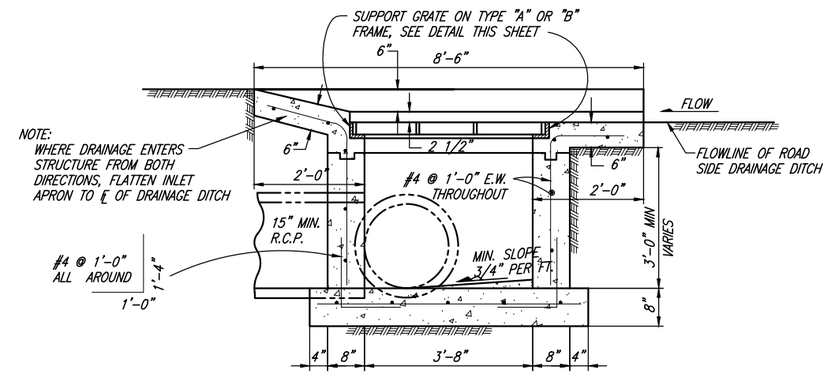

NOTE:
WHERE DRAINAGE ENTERS STRUCTURE FROM BOTH DIRECTIONS, FLATTEN INLET APRON TO ℄ OF DRAINAGE DITCH

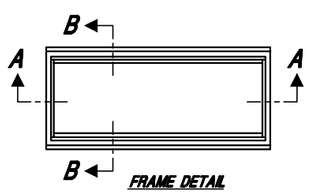

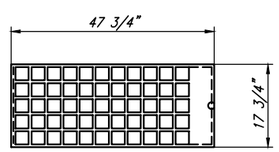

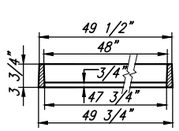

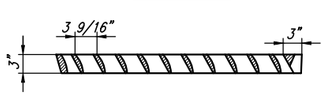

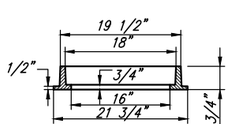

TYPE "A" NOTES:
1. GRATE AND FRAME SHALL BE AS MANUFACTURED BY "D+L SUPPLY" I-1803.
2. ALTERNATE: FABRICATED STEEL GRATE AND FRAME AS MANUFACTURED BY F+G, WELDING MODEL V-648 (GALVANIZED)

VANE GRATE

TYPE "A" STANDARD GRATE & FRAME

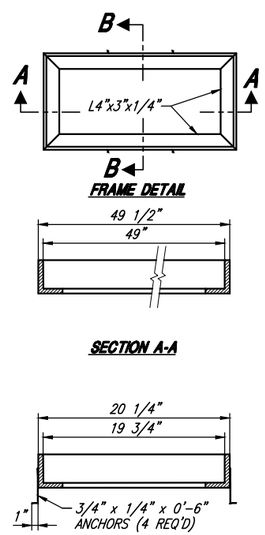

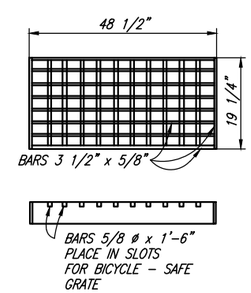

TYPE "B" NOTES:
1. ALL GRATES SHALL BE U.D.O.T. STD. V-988 AS SHOWN IN DETAIL AND GALVANIZED IN ACCORDANCE WITH U.D.O.T. STANDARDS.
2. BICYCLE SAFE GRATE REQ'D WHERE SPECIFIED BY THE CITY ENGINEER.
3. FRAME SHALL BE PRE-FABRICATED AND GALVANIZED IN ACCORDANCE WITH A.S.T.M. A-123 SPECIFICATIONS.

U.D.O.T. STANDARD GRATE

TYPE "B" STANDARD GRATE & FRAME

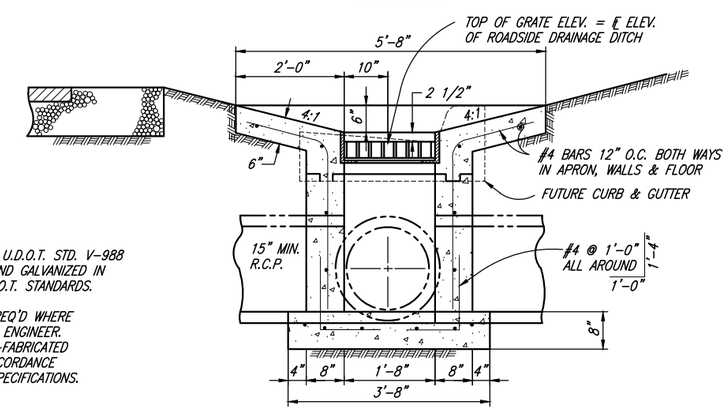

TYPE V CATCH BASIN

REGISTERED PROFESSIONAL ENGINEER No. 276361 CHRIS L. BRENNOLT STATE OF UTAH

PROJECT ENGINEER

FEBRUARY 2010
DATE

REV.	DATE	APPR.	
1	NOV.09	CLB	MOVED TO SHEET 13

SCALE: N.T.S.

DESIGNED KLJ
DRAWN EDH
CHECKED CLB

JONES & ASSOCIATES
CONSULTING ENGINEERS
1716 East 5600 South
South Ogden, Utah 84403 (801) 476-9767

TREMONTON CITY CORPORATION
PUBLIC WORKS STANDARDS

TYPE V CATCH BASIN & OUTLET DIPSTONE DETAILS

SHEET: 13 OF 21 SHEETS

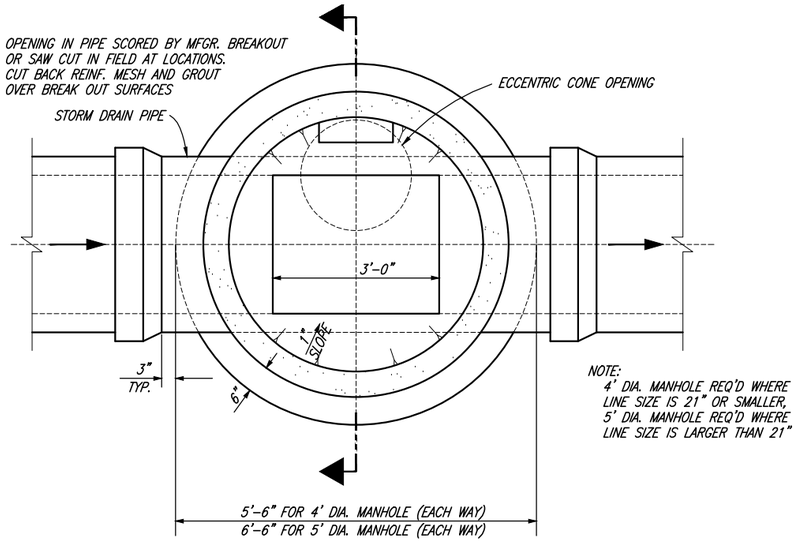

NOTE:
4' DIA. MANHOLE REQ'D WHERE LINE SIZE IS 21" OR SMALLER.
5' DIA. MANHOLE REQ'D WHERE LINE SIZE IS LARGER THAN 21"

TYPICAL LINE MANHOLE

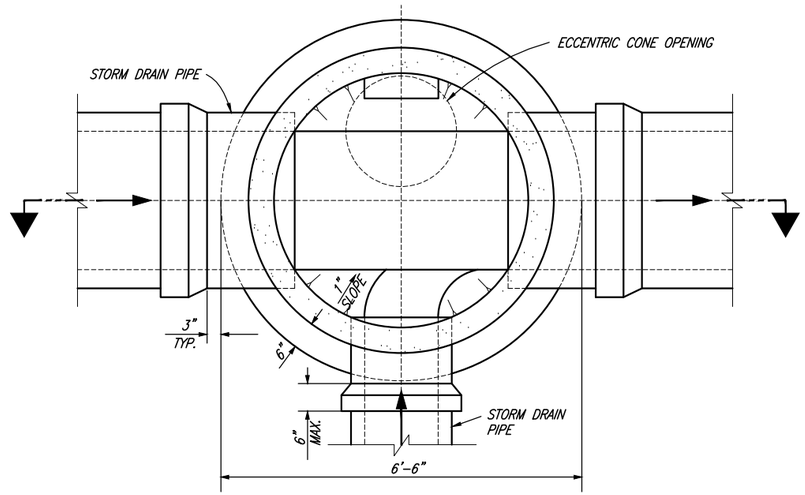

TYPICAL JUNCTION MANHOLE

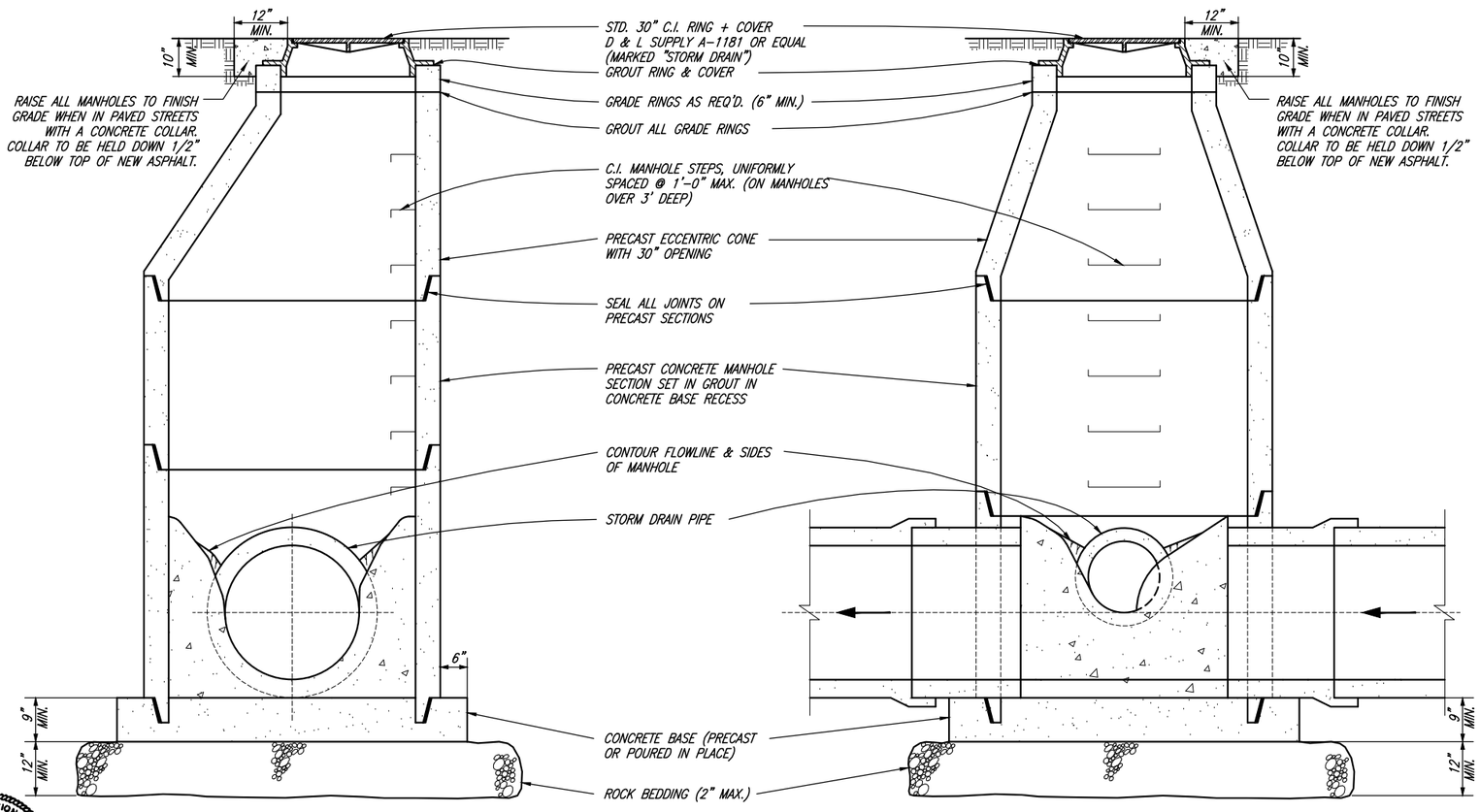

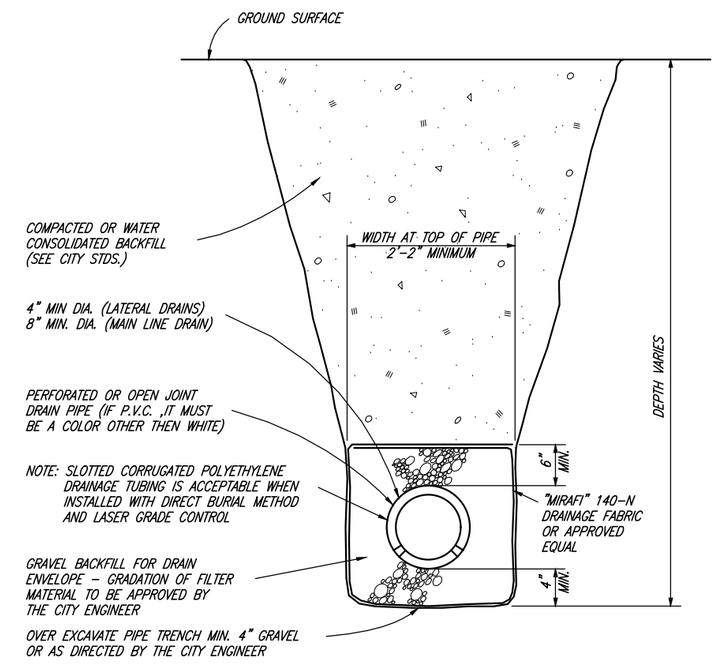

LAND DRAIN DETAIL

REGISTERED PROFESSIONAL ENGINEER No. 276381 CHRIS L. BRENHOLT STATE OF UTAH

PROJECT ENGINEER

FEBRUARY 2010
DATE

REV.	DATE	APPR.	
1	NOV.09	CLB	MOVED TO SHEET 14, ADDED CONCRETE COLLAR

SCALE: N.T.S.

DESIGNED KLJ
DRAWN EDH
CHECKED CLB

JONES & ASSOCIATES CONSULTING ENGINEERS
1716 East 5600 South
South Ogden, Utah 84403 (801) 476-9767

TREMONTON CITY CORPORATION
PUBLIC WORKS STANDARDS

STORM DRAIN M.H. & SUBSURFACE DRAIN DETAILS

SHEET: 14 OF 21 SHEETS

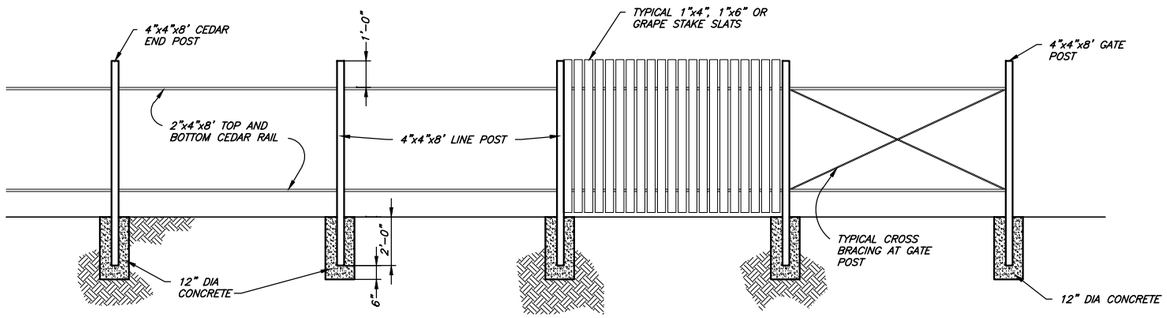

TYPICAL WOOD FENCE

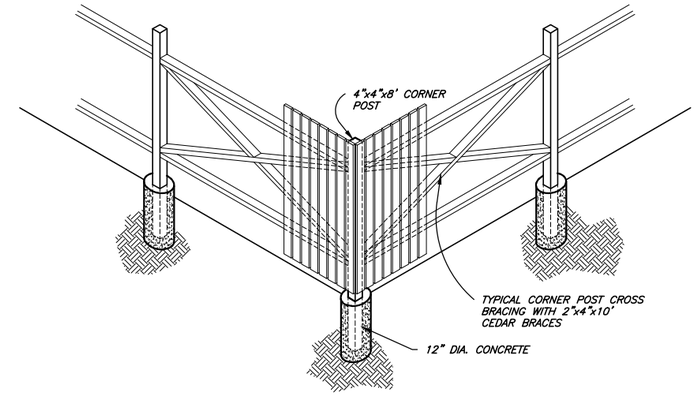

CORNER POST DETAIL

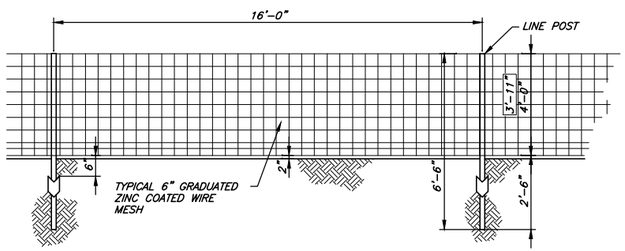

TYPICAL WIRE FENCE

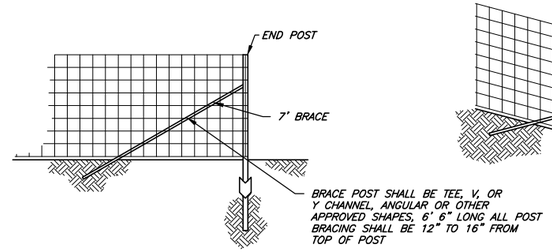

END POST BRACING DETAIL

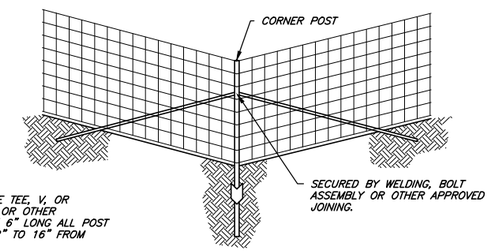

CORNER POST DETAIL

NOTE:
THIS SHEET SPECIFIES VARIOUS FENCING TYPES TO BE CONSTRUCTED WHEN CALLED FOR BY THE CITY ENGINEER.

GATES			
GATE POST AND GATE FRAMES			
HEIGHT	GATE OPENING	GATE POST	GATE FRAME
6 FEET AND OVER	SINGLE TO 6' OR DOUBLE TO 12'	2 5/8"	1 1/2"
	SINGLE OVER 6' TO 13' OR DOUBLE OVER 12' TO 24'	3 1/2"	
	SINGLE OVER 13' TO 18' OR DOUBLE OVER 24' TO 36'	6"	
	SINGLE TO 18' OR DOUBLE OVER 36'	8"	

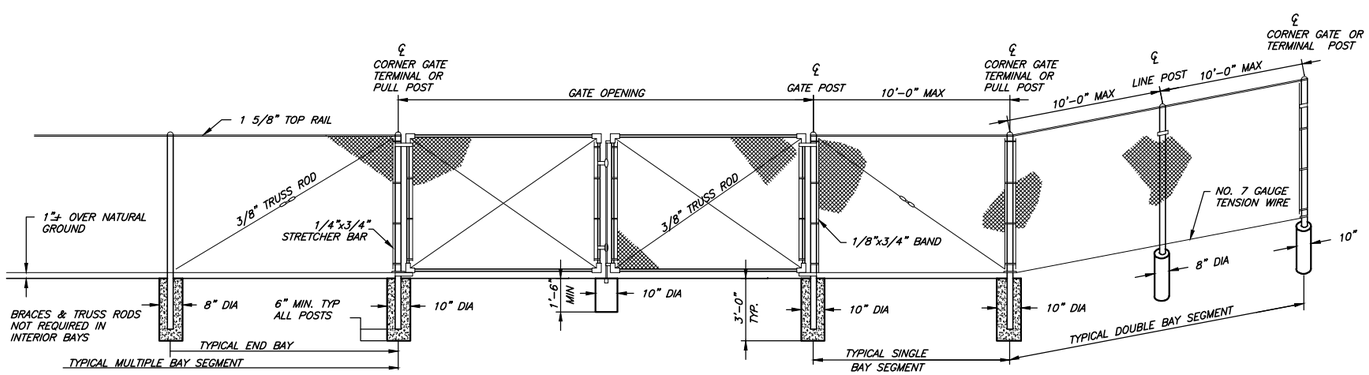

TYPICAL CHAIN LINK FENCE

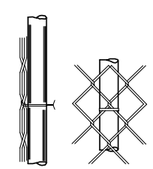

TYPICAL TIE DETAIL

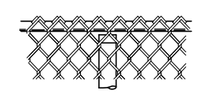

KNUCKLED SELVAGE

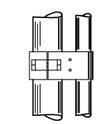

TOP GATE HINGE

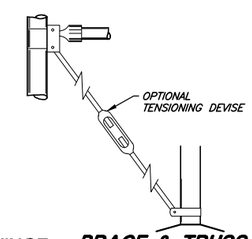

BRACE & TRUSS CONNECTIONS

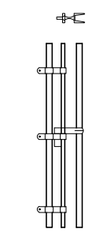

DROP ROD ASSEMBLY

NOTE

1. ALL FABRIC SHALL BE 6' HIGH CHAIN LINK OF 2" GALVANIZED MESH OF 11-1/2 GAUGE.
2. ALL STEEL PIPE MEMBERS SHALL CONFORM TO THE REQUIREMENTS OF A.S.T.M. DESIGNATION A-120,SCHEDULE 40, HOT DIPPED ZINC COATED STEEL PIPE.
3. ALL POST SHALL BE SET IN CONCRETE AND SHALL BE TOPPED WITH BALL TYPE OR OTHER APPROVED ORNAMENT.
4. ALL END, CORNER OR PULL POST SHALL BE 9 FEET IN LENGTH WITH A MINIMUM DIAMETER OF 2 7/8 INCHES: ALL LINE POST SHALL BE 8 FEET 8 INCHES IN LENGTH WITH A MINIMUM DIAMETER OF 1 7/8 INCHES.

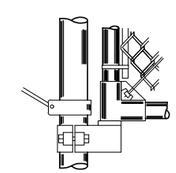

BOTTOM GATE HINGE

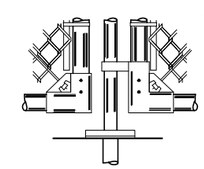

CENTER GATE STOP

REGISTERED PROFESSIONAL ENGINEER No. 276381 CHRIS L. BRENKHOLT STATE OF UTAH

PROJECT ENGINEER

FEBRUARY 2010
DATE

REV.	DATE	APPR.	
1	NOV.09	CLB	MOVED TO SHEET 15

SCALE: NA

DESIGNED KLJ
DRAWN EDH
CHECKED CLB

JONES & ASSOCIATES
CONSULTING ENGINEERS
1716 East 5600 South
South Ogden, Utah 84403 (801) 476-9767

TREMONTON CITY CORPORATION
PUBLIC WORKS STANDARDS

FENCING STANDARD DETAILS

SHEET: 15 OF 21 SHEETS

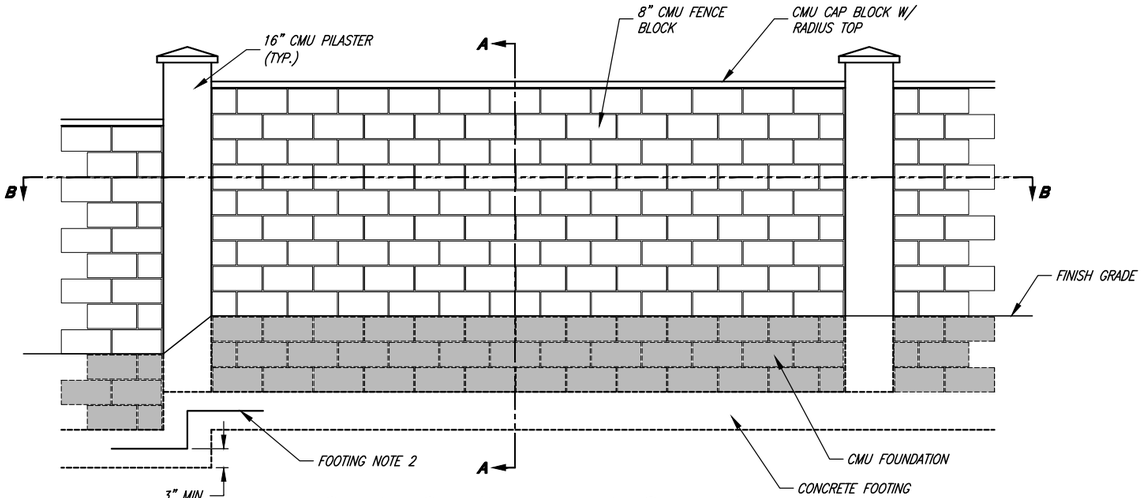

CMU FENCE WALL - ELEVATION VIEW

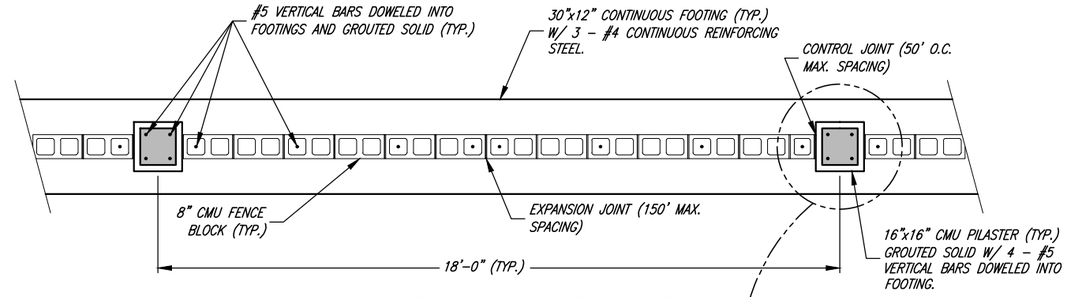

CMU FENCE WALL - PLAN VIEW

SECTION B-B

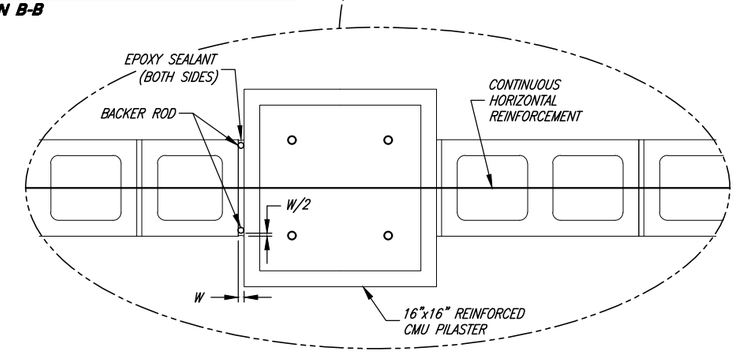

TYPICAL CONTROL JOINT

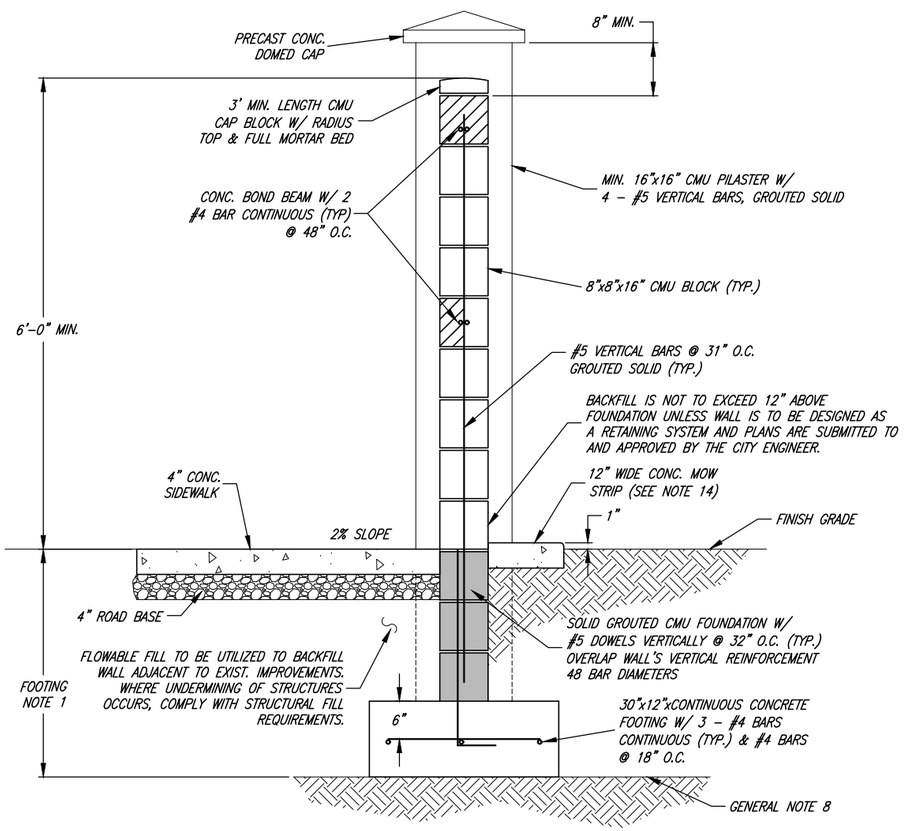

CMU FENCE WALL - SECTION A-A

GENERAL NOTES

1. CONTROL JOINTS 50' MAX. SPACING AT PILASTERS
2. EXPANSION JOINTS AT 150' TO 200' INTERVALS, TERMINATE HORIZONTAL REINFORCEMENT WITH STANDARD HOOK IN ADJACENT REINFORCED VERTICAL CELLS.
3. ALL WALLS MUST MEET OR EXCEED AN 80 MPH WIND LOAD DESIGN.
4. STEP FOOTING AND WALL AT PILASTERS ONLY.
5. USE TYPE "S" MORTAR ONLY.
6. CENTRALLY BATCH GROUT.
7. COMPLY WITH CURRENT INTERNATIONAL BUILDING CODE AND STANDARDS.
8. PLACE FOOTING ON UNDISTURBED SOILS OR FILL COMPACTED TO 96% MAXIMUM DRY DENSITY (ASTM D698).
9. USE TYPE I MOISTURE CONTROLLED CMU'S AND SINGLE 16"x16" PILASTER BLOCKS.
10. RUNNING BOND JOINT PATTERN ONLY.
11. UTILIZE BACKER ROD AND UDOT APPROVED EPOXY SEALER AT CONTROL JOINTS.
12. MINIMUM WALL HEIGHT SHALL BE 6'-0" AT ANY LOCATION AS MEASURED FROM FINISHED GRADE OR TOP OF SIDEWALK.
13. APPLY ANTI-GRAFFITTI COATING WHEN REQUIRED BY TREMONTON CITY.
14. CONCRETE MOW STRIPS SHALL BE REQUIRED ON SIDE FACING STREET WHERE ADJACENT LANDSCAPING IS GRASS.

FOUNDATION NOTES

1. #5 VERTICAL BARS @ 32" O.C. WITH STANDARD HOOK

REINFORCING STEEL NOTES

1. REINFORCING STEEL SHALL BE 60 GRADE.
2. STAGGER HORIZONTAL BAR LAP SPLICE LOCATIONS.
3. TERMINATE ALL REINFORCING STEEL WITH STANDARD HOOKS.
4. ALTERNATE STANDARD HOOKS IN FOOTING.
5. MAINTAIN CONTINUOUS HORIZONTAL REINFORCING THROUGH CONTROL JOINTS.
6. MINIM WALL REINFORCING STEEL SHALL BE:
   VERT. - 1 #5 BARS @ 32" O.C.
   HORIZ. - 2 #4 BARS CONTINUOUS IN BOND BEAMS.
7. LAP SPLICE 48 BAR DIAMETERS IN WALLS.
8. SECURE ALL REINFORCING STEEL FORM DISPLACEMENT PRIOR TO CONC. PLACEMENT.

FOOTING NOTES

1. 30" MIN. FROST PROTECTION FROM FINISH GRADE TO BOTTOM OF FOOTING.
2. 3 - #4 BARS CONTINUOUS REINFORCING STEEL.
3. 30 BAR DIAMETER MINIMUM LAP SPLICES.

PILASTER NOTES

1. 4 - #5 VERTICAL BARS DOWELED TO THE FOOTING.

PROJECT ENGINEER				
DATE	REV.	DATE	APPR.	

SCALE: NA

DESIGNED BEB
DRAWN BEB
CHECKED CLB

JONES & ASSOCIATES
CONSULTING ENGINEERS
1716 East 5600 South
South Ogden, Utah 84403 (801) 476-9767

TREMONTON CITY CORPORATION
PUBLIC WORKS STANDARDS

MASONRY WALL DETAILS

SHEET: 15A OF 21 SHEETS

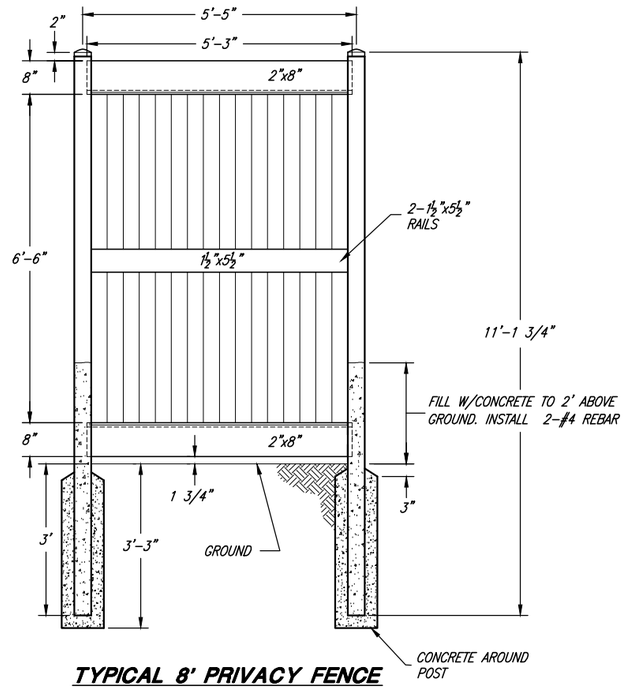

TYPICAL 8' PRIVACY FENCE

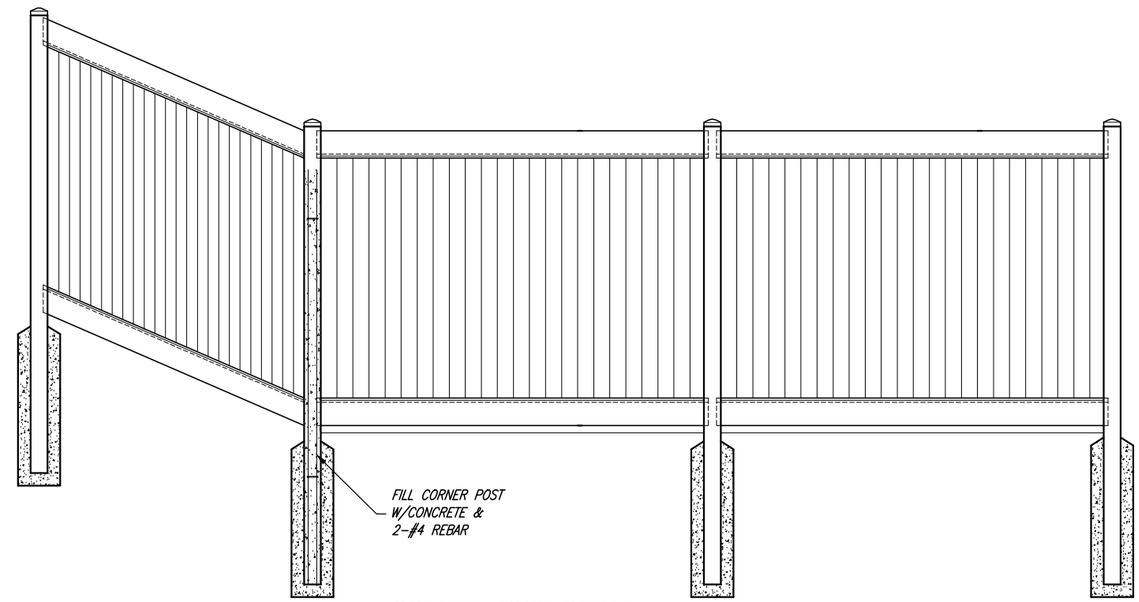

CORNER POST DETAIL

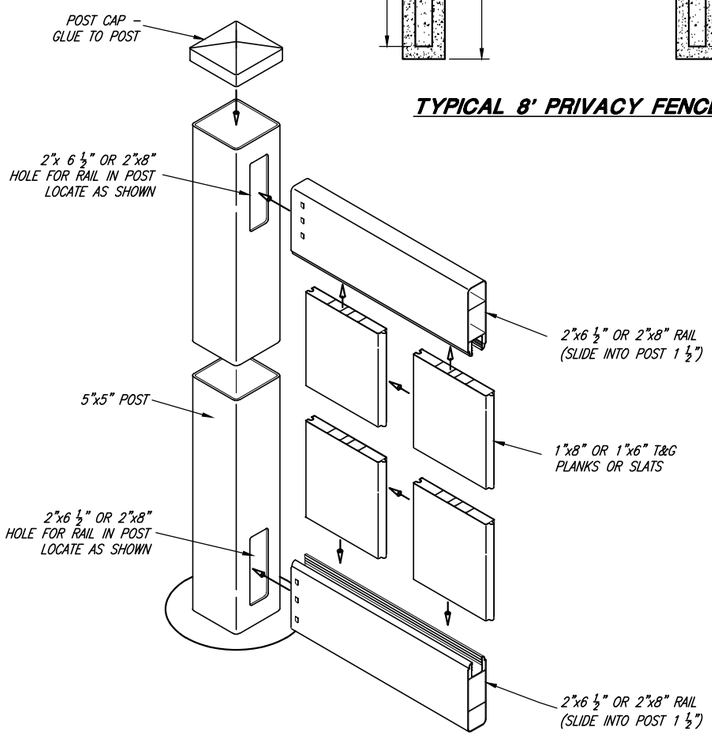

TYPICAL INSTALLATION DETAIL

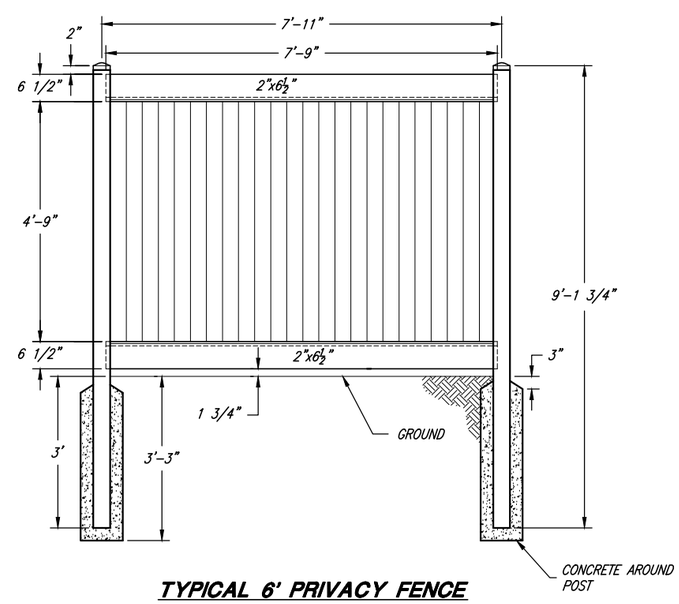

TYPICAL 6' PRIVACY FENCE

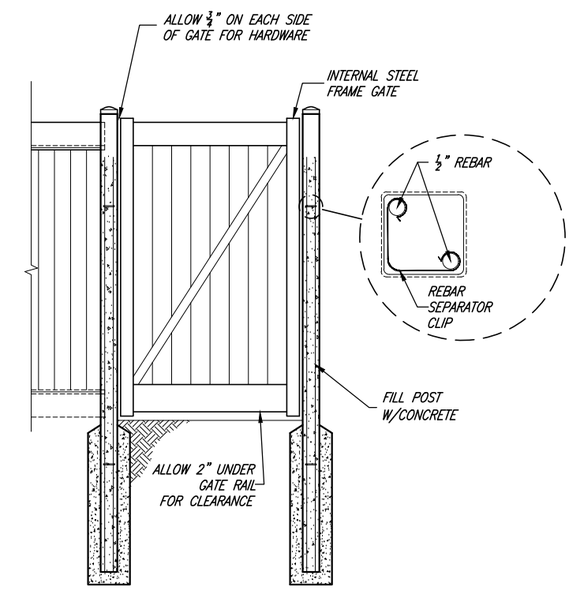

TYPICAL GATE

PROJECT ENGINEER				SCALE: NA	DESIGNED BEB	JONES & ASSOCIATES CONSULTING ENGINEERS	TREMONTON CITY CORPORATION
					DRAWN BEB	1716 East 5600 South	PUBLIC WORKS STANDARDS
DATE	REV.	DATE	APPR.		CHECKED CLB	South Ogden, Utah 84403 (801) 476-9767	VINYL FENCE DETAILS

SHEET: 15B OF 21 SHEETS

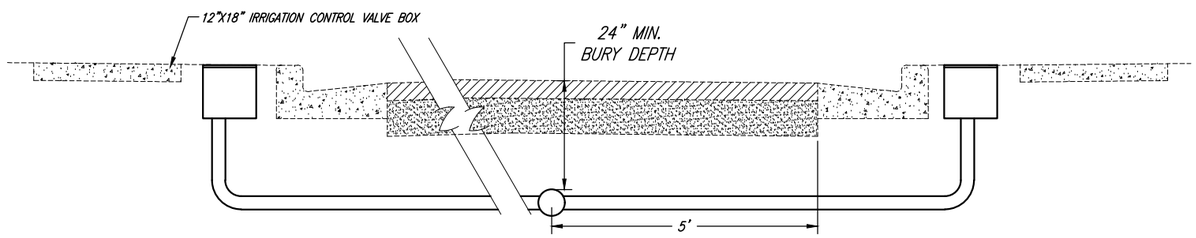

TYPICAL CROSS SECTION

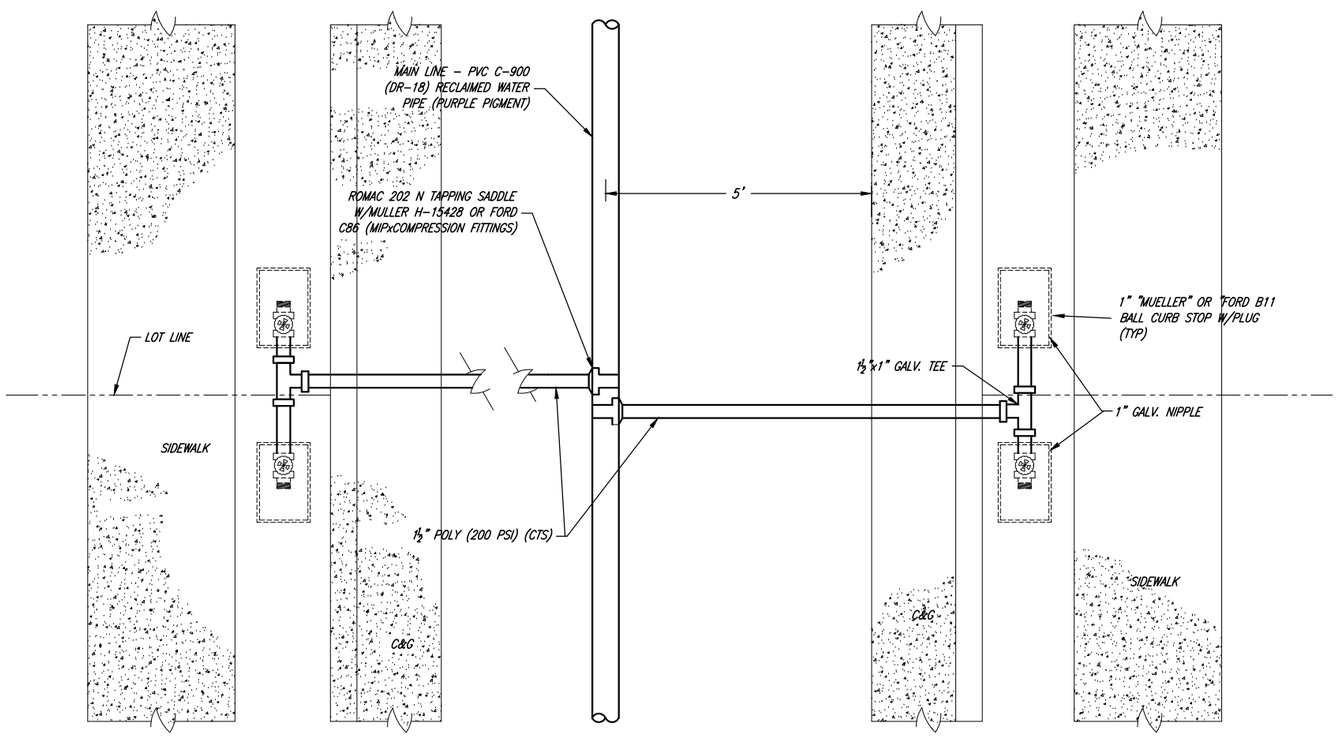

TYPICAL PLAN VIEW

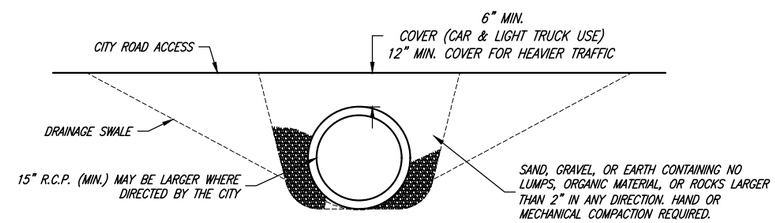

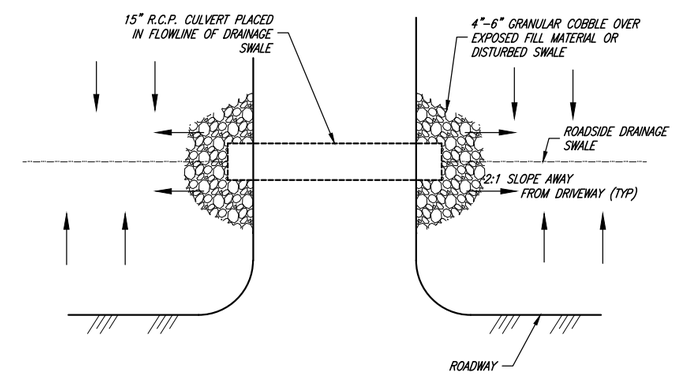

DRIVEWAY CULVERT DETAIL

REGISTERED PROFESSIONAL ENGINEER
No. 278381
CHRIS L. BRENHOLT
STATE OF UTAH

PROJECT ENGINEER

FEBRUARY 2010
DATE

REV.	DATE	APPR.	
1	NOV.09	CLB	MOVED TO SHEET 16

SCALE: NA

DESIGNED KLJ
DRAWN EDH
CHECKED CLB

JA JONES & ASSOCIATES
CONSULTING ENGINEERS
1716 East 5600 South
South Ogden, Utah 84403 (801) 476-9767

TREMONTON CITY CORPORATION
PUBLIC WORKS STANDARDS

SECONDARY WATER & DRIVEWAY CULVERT DETAIL

SHEET: 16 OF 21 SHEETS

PLANTING CHART				
SIZE	MATURE HEIGHT	CURB/SIDEWALK	STREET CORNER/FH	POWER/UTILITY DISTANCE
LARGE TREES	OVER 40 FEET	4 FEET MINIMUM DISTANCE	30 FEET FROM STREET CORNER & 10 FEET FROM ANY FIRE HYDRANT	10 LATERAL FEET OF ANY OVERHEAD UTILITY WIRE & 5 LATERAL FEET OF ANY UNDERGROUND UTILITY LINE
MEDIUM TREES	25 FEET TO 40 FEET	3 FEET MINIMUM DISTANCE		
SMALL TREES	LESS THAN 25 FEET	2 FEET MINIMUM DISTANCE		--

NOTES:

1. ALL PLANTED TREES TO BE SPACED IN ACCORDANCE WITH THE SPECIES CHARACTERISTICS SUCH THAT THE TREES' CROWNS AT MATURITY WILL NOT OVERLAP WITH ANOTHER TREE NOR TOUCH OR OVERHANG A BUILDING.
2. FOR ADDITIONAL HELP WITH TREE SELECTION VISIT WWW.TREEBROWSER.ORG FOR FURTHER INFORMATION ON NATIVE AND INTRODUCED TREES GROWING IN UTAH AND THE INTERMOUNTAIN WEST.

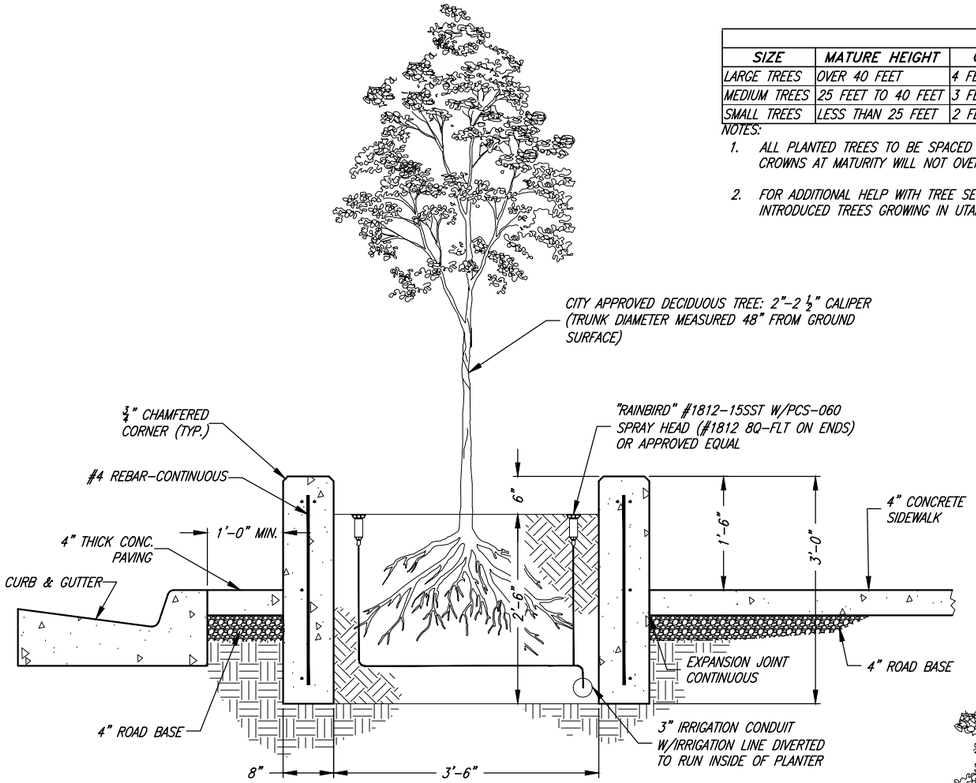

TREES IN PLANTER BOXES

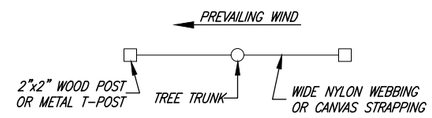

SMALL TREE STAKING (<2" CAL.)

NOTE:
REMOVE STAKING ONCE TREE ROOTS ARE ESTABLISHED

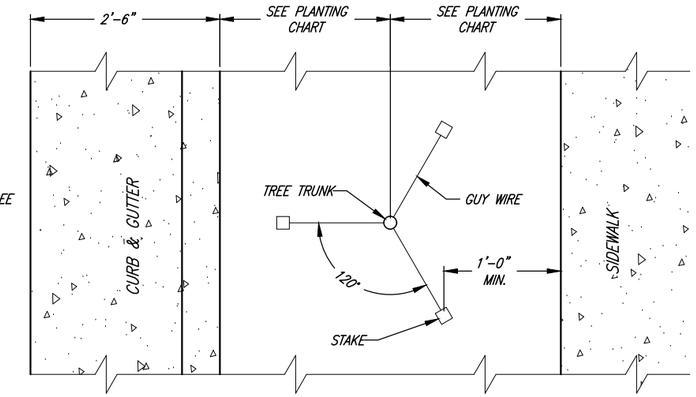

TREE STAKING (>2" CAL.)

STAKING DETAILS

STAKING OPTIONAL UNLESS REQUIRED BY THE CITY INSPECTOR. STAKES OR GUYS ARE TO BE INSTALLED USING ACCEPTED ARBORICULTURE PRACTICE.

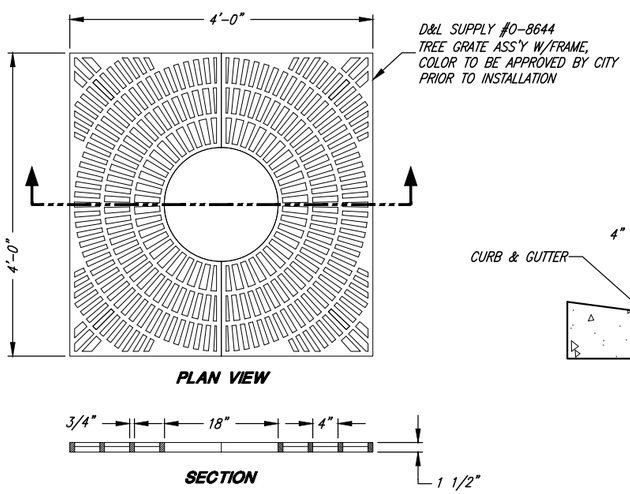

TREE GRATE DETAIL

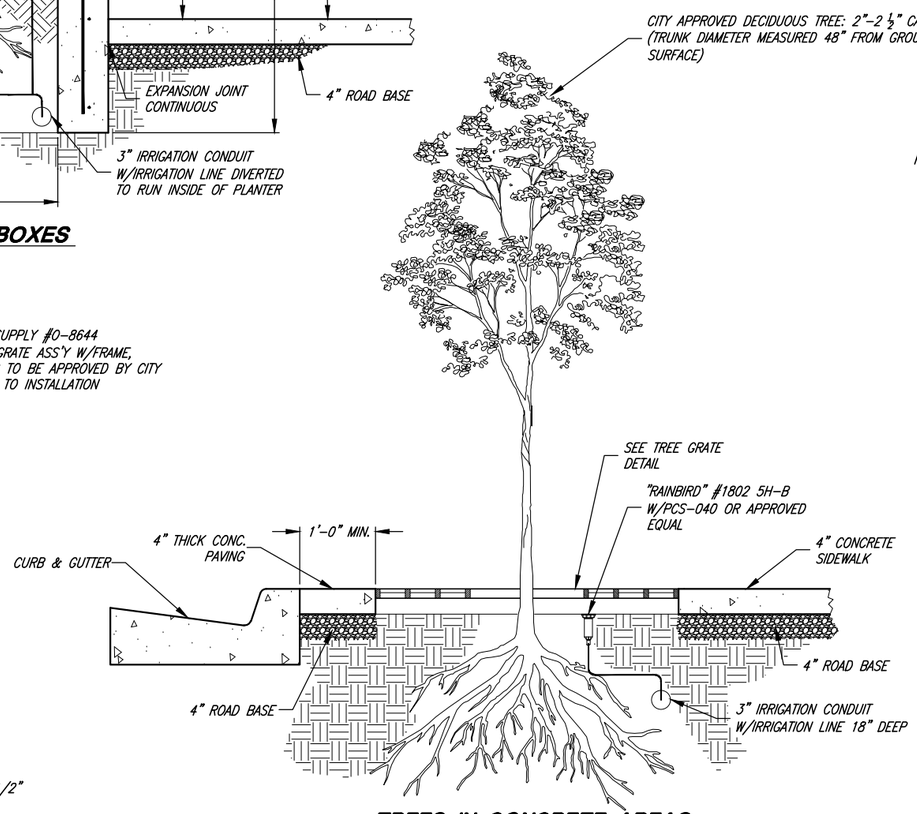

TREES IN CONCRETE AREAS

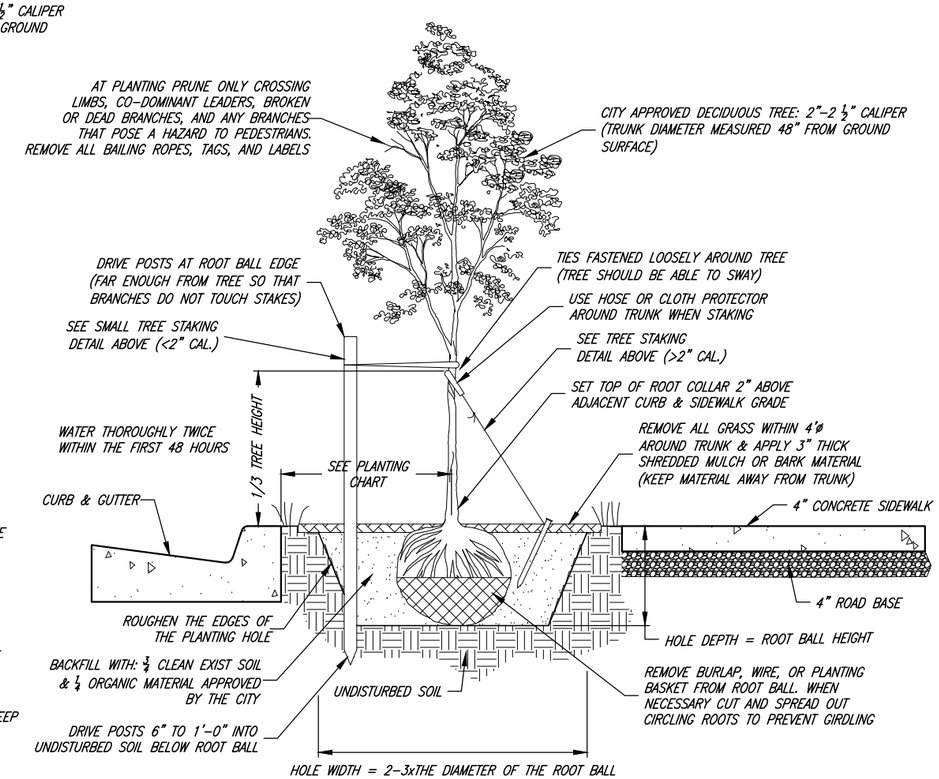

TREES IN PARKSTRIP & PLANTING DETAIL

PROJECT ENGINEER

DATE

REV.	DATE	APPR.

SCALE: NA

DESIGNED BEB
DRAWN BEB
CHECKED CLB

JONES & ASSOCIATES
CONSULTING ENGINEERS
1716 East 5600 South
South Ogden, Utah 84403 (801) 476-9767

TREMONTON CITY CORPORATION
PUBLIC WORKS STANDARDS

TREE DETAILS

SHEET: 17 OF 21 SHEETS

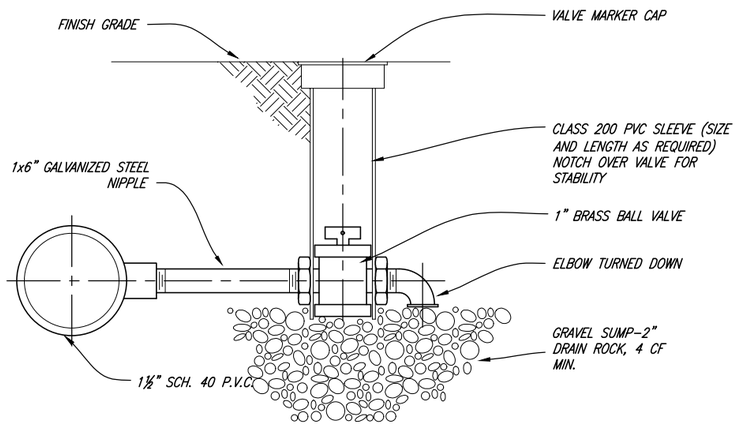

MANUAL DRAIN VALVE

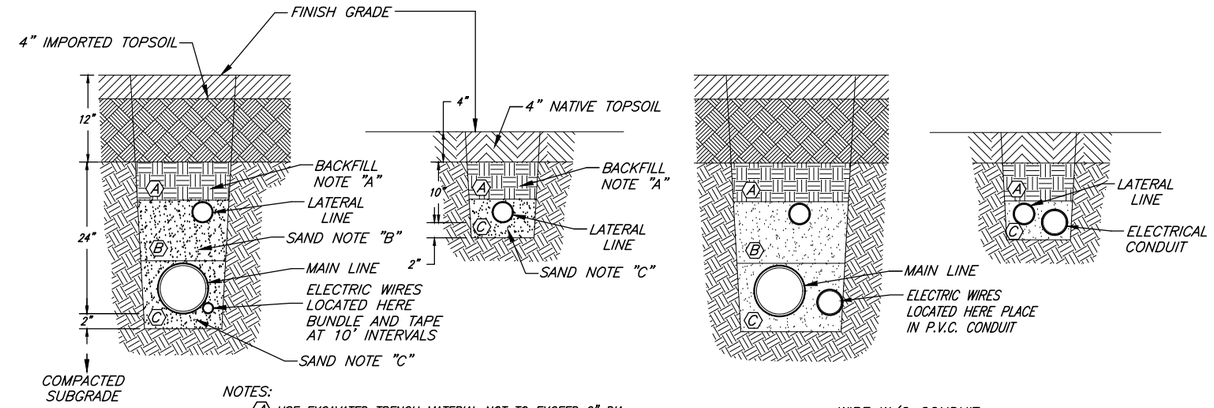

NOTES:

(A) USE EXCAVATED TRENCH MATERIAL NOT TO EXCEED 2" DIA, ROCKS.

(B) IN CASES WHERE LATERAL LINE IS INSTALLED IN MAINLINE TRENCH, USE SAND TO BACKFILL TRENCH SO THAT LATERAL LINE IS 14" BELOW FINISH GRADE & COVERED W/ SAND.

(C) USE SAND TO PROVIDE A 2" BED AND COVER ALL P.V.C. PIPES AND ELECTRICAL WIRES. IN CASES WHEN NATIVE MATERIAL IS NOT ACCEPTABLE AS BACKFILL.

GEN. NOTE: LOCATE ALL TRENCHES 12" AWAY FROM BUILDINGS, SIDEWALKS, OR ANY HARD SURFACE. SETTLE ALL TRENCHES W/ WATER PRIOR TO FINE GRADING AND RAKING OF TOPSOIL. MAIN LINES RUNNING IN SAME TRENCH SHOULD BE SIDE BY SIDE WITH A MINIMUM DISTANCE OF 6" APART.

SPRINKLER TRENCH DETAIL

WIRE W/O CONDUIT

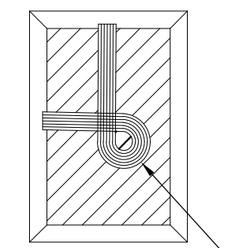

TIE A 24-INCH LOOP IN ALL WIRING AT CHANGES OF DIRECTION OF 30° OR GREATER. UNTIE AFTER ALL CONNECTIONS HAVE BEEN MADE.

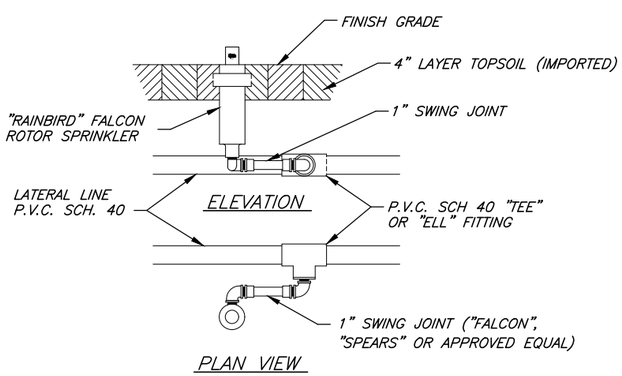

ROTOR HEAD CONNECTION DETAIL

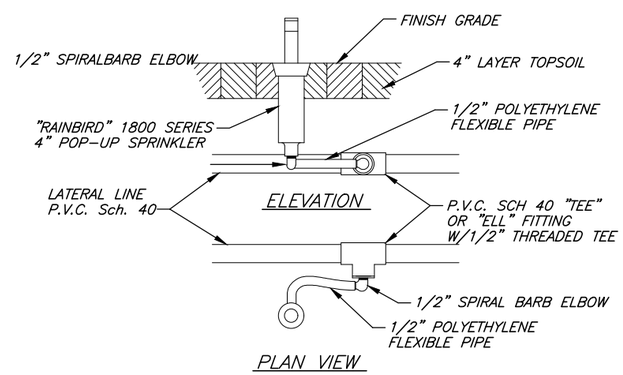

1800 SERIES HEAD CONNECTION DETAIL

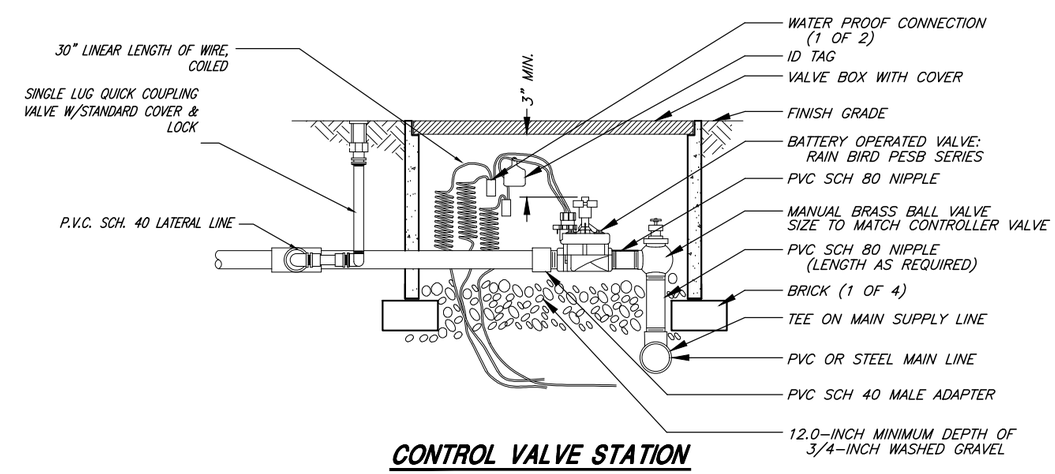

CONTROL VALVE STATION

PROJECT ENGINEER				SCALE: NA	DESIGNED BEB	JA JONES & ASSOCIATES CONSULTING ENGINEERS 1716 East 5600 South South Ogden, Utah 84403 (801) 476-9767	TREMONTON CITY CORPORATION
DATE	REV.	DATE	APPR.		DRAWN BEB		PUBLIC WORKS STANDARDS
					CHECKED CLB		SPRINKLER DETAILS

SHEET: 18 OF 21 SHEETS

TRAIL NOTES:

1. TRAILS SHOULD BE DESIGNED AND CONSTRUCTED AT GRADES LESS THAN 8% GRADE TO PROMOTE ACCESSIBLE USE.
2. GRADE AVERAGES OF LESS THAN 6% WILL PROVIDE THE MOST USER FRIENDLY EXPERIENCE AND ARE PREFERRED.
3. CRUSHED STONE SURFACE SHOULD BE MADE FROM CRUSHER FINES CRUSHED INTO IRREGULAR ANGULAR PARTICLES.
4. WHERE POSSIBLE A SLIGHT MEANDERING ALIGNMENT SHOULD BE USED.
5. WHERE REQUIRED BENCHES SHOULD BE SPACED APPROXIMATELY EVERY ¼ MILE

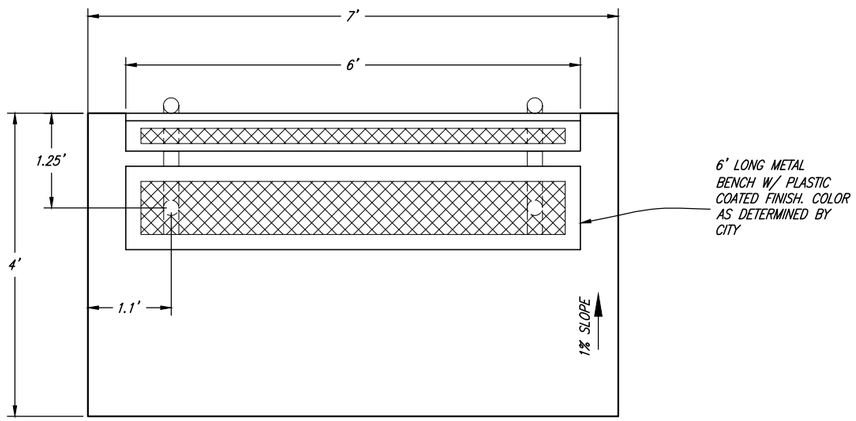

BENCH PLAN

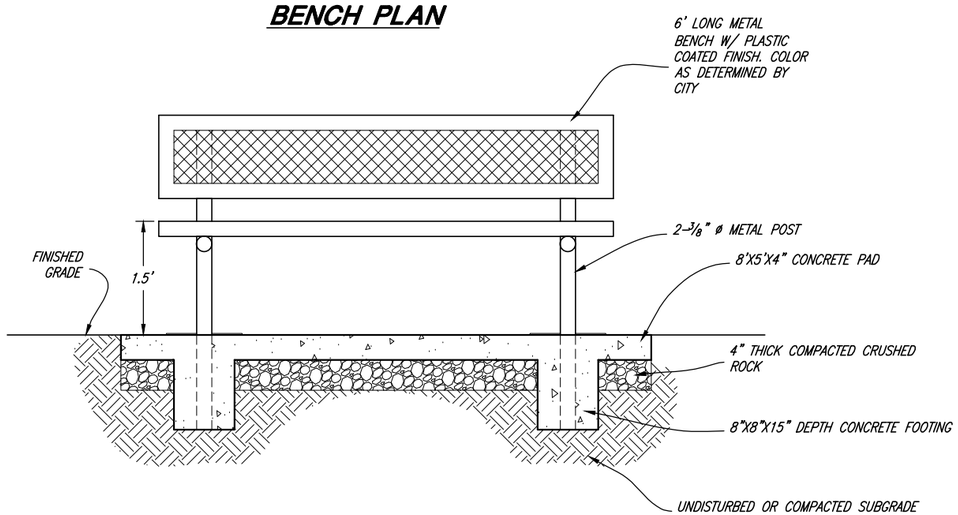

BENCH ELEVATION

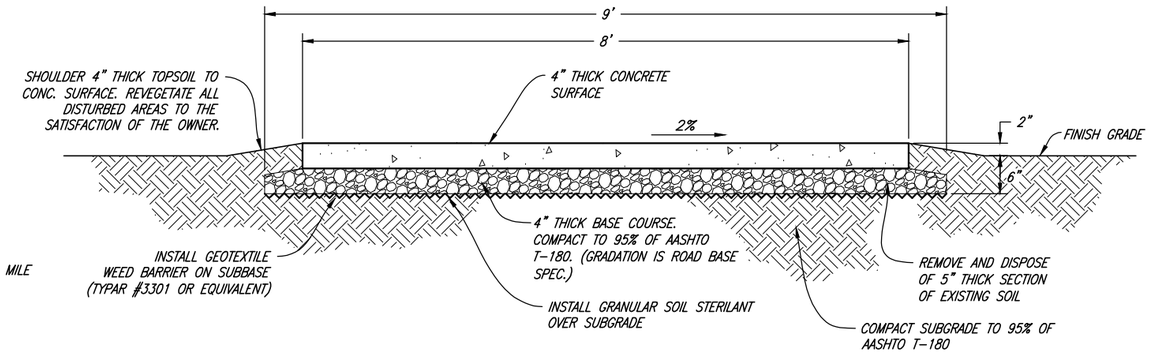

8' CONCRETE TRAIL CROSS SECTION

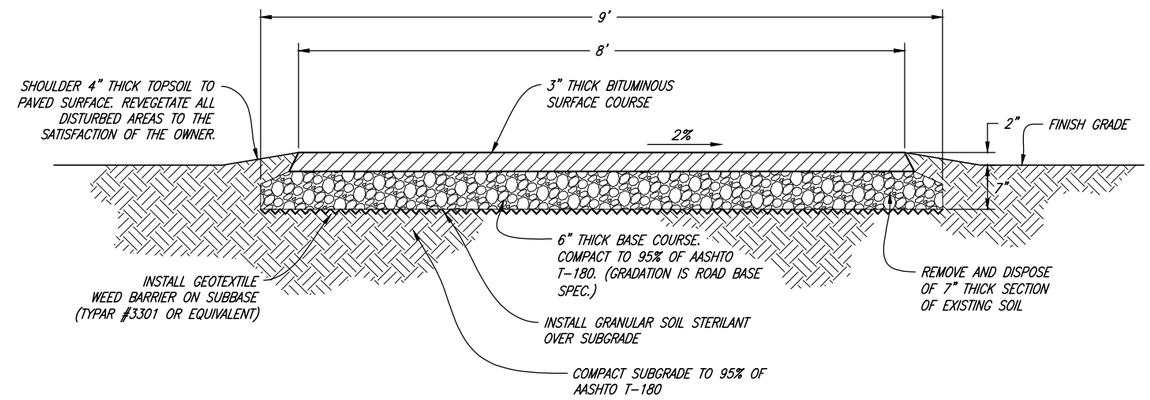

8' ASPHALT TRAIL CROSS SECTION

CRUSHED STONE GRADATION TABLE

SIEVE	% PASSING
3/8"	100%
1/4"	65%
3/16"	50%
1/8"	35%
1/16"	25%

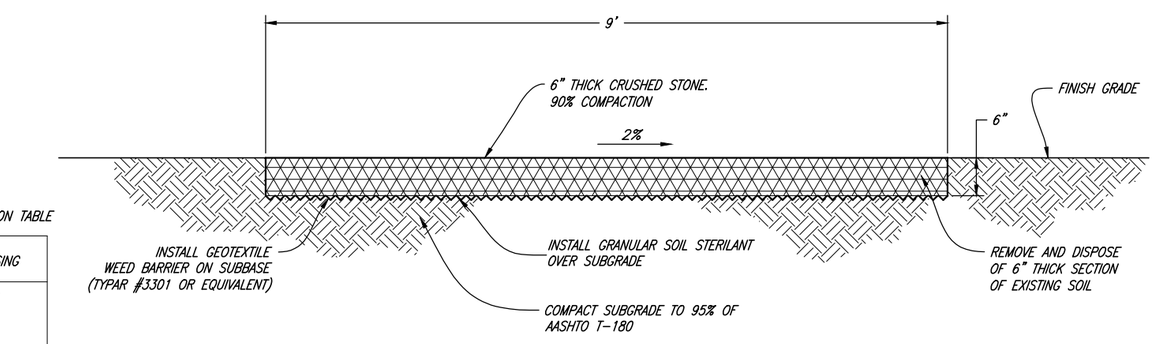

9' CRUSHED STONE TRAIL CROSS SECTION

PROJECT ENGINEER			
DATE	REV.	DATE	APPR.

SCALE: NA

DESIGNED BEB
DRAWN BEB
CHECKED CLB

JONES & ASSOCIATES
CONSULTING ENGINEERS
1716 East 5600 South
South Ogden, Utah 84403 (801) 476-9767

TREMONTON CITY CORPORATION
PUBLIC WORKS STANDARDS
TRAIL DETAILS

SHEET: 19 OF 21 SHEETS

CITY OWNED LIGHT POLE SPECIFICATIONS

POST DESCRIPTION
THE LIGHTING POST SHALL BE ALL ALUMINUM, ONE-PIECE CONSTRUCTION, WITH A CLASSIC TAPERED AND FLUTED BASE DESIGN.

MATERIALS
THE BASE SHALL BE HEAVY WALL, CAST ALUMINUM PRODUCED FROM CERTIFIED ASTM 356.1 INGOT PER ASTM B-179-95A OR ASTM B26-95. THE SHAFT SHALL BE EXTRUDED FROM ALUMINUM, ASTM 6061 ALLOY, HEAT TREATED TO A T6 TEMPER. ALL HARDWARE SHALL BE TAMPER RESISTANT STAINLESS STEEL. ANCHOR BOLTS TO BE COMPLETELY HOT DIP GALVANIZED.

CONSTRUCTION
THE SHAFT SHALL BE DOUBLE WELDED TO THE BASE CASTING AND SHIPPED AS ONE PIECE FOR MAXIMUM STRUCTURAL INTEGRITY. THE SHAFT SHALL BE WELDED INSIDE THE BASE CASTING AT THE TOP OF THE ACCESS DOOR, AND EXTERNALLY WHERE THE SHAFT EXITS THE BASE. ALL WELDING SHALL BE ANSI/AWS

FINISH
THE ENTIRE ASSEMBLY SHALL BE ANODIZED AND THEN RECEIVE A STANDARD BLACK HOLOPHANE POWDER COAT FINISH OVER THE ANODIZED MATERIAL.

DIMENSIONS
THE POST SHALL BE 14'-0" IN HEIGHT WITH A 19" DIAMETER BASE. THE SHAFT DIAMETER SHALL BE 4". AT THE TOP OF THE POST, AN INTEGRAL 3" O.D. x 3" TALL TENON WITH A TRANSITIONAL DONUT SHALL BE PROVIDED FOR LUMINAIRE MOUNTING. A HAND HOLE SHALL BE PROVIDED FOR ACCESS.

DELIVERY/INSTALLATION
THE POLE WITH ITS BASE AND GLOBE SHALL BE ALL ONE COMPLETE UNIT WHEN DELIVERED ON-SITE. THE POST SHALL BE PROVIDED WITH FOUR, HOT DIP GALVANIZED L-TYPE ANCHOR BOLTS TO BE INSTALLED ON A 14" DIAMETER BOLT CIRCLE. A DOOR SHALL BE PROVIDED IN THE BASE FOR ANCHORAGE AND WIRING ACCESS. A GROUNDING SCREW SHALL BE PROVIDED INSIDE THE BASE OPPOSITE THE DOOR.

LUMINAIRE
- "ANTIQUE STREET LAMPS" RG LED SERIES - CURVED METAL TOP ACORN STYLED LUMINAIRE
- INJECTION MOLDED, REFRACTIVE, CLEAR ACRYLIC OR POLYCARBONATE BASE
- BLACK POWDER COAT FINISH
- 3" O.D. x 3" TALL TENON REQUIRED FOR MOUNTING
- STAINLESS STEEL HARDWARE
- FINIAL: AS SPECIFIED BY THE CITY
- WATTAGE: EQUAL TO 150 WATT
- VOLTS: 208, 240, 277 VOLT
- PHOTO CELL CONTROLLED

STREET LIGHT LOCATION NOTES:
STREET LIGHTS ARE TO BE PLACED EVERY 300' ALTERNATING SIDES OF THE STREET AND AT ALL INTERSECTIONS.

STREET LIGHTS POLES SHALL BE LOCATED AT ROADWAY INTERSECTIONS (NEAR FIRE HYDRANTS WHERE POSSIBLE) AND AT OTHER REQUIRED LOCATIONS PER CITY STANDARDS.

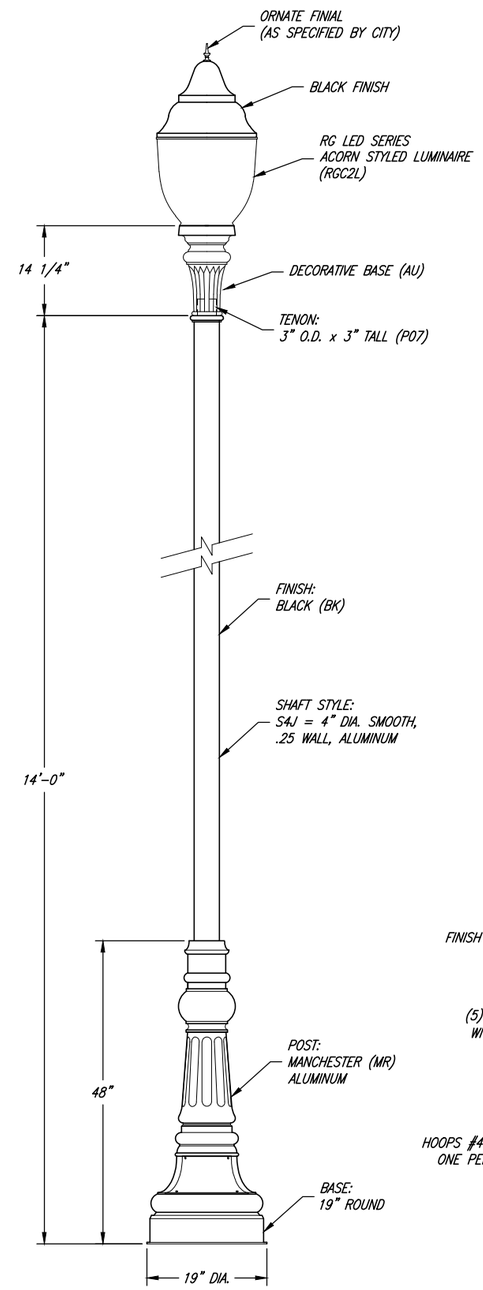

CITY OWNED LIGHT POLE

ATTENTION

DEVELOPER/CONTRACTOR SHALL NOTIFY THE ROCKY MOUNTAIN POWER OFFICE PRIOR TO LIGHTING INSTALLATION TO ARRANGE FOR POWER TO BE PROVIDED ON SITE, AS WELL AS APPROVAL OF LIGHTING UNIT LOCATIONS AND APPROVAL OF ACTUAL COMPONENT SELECTION.

ALL FINAL WORK AND MATERIAL TO BE APPROVED BY THE CITY AND THE CITY ENGINEER.

GENERAL NOTE:
IN THE EVENT THAT ANY SPECIFIED PART IS NO LONGER AVAILABLE, THE PUBLIC WORKS DIRECTOR SHALL DETERMINE/APPROVE A NEW PART THAT BEST MATCHES AS A SUBSTITUTE.

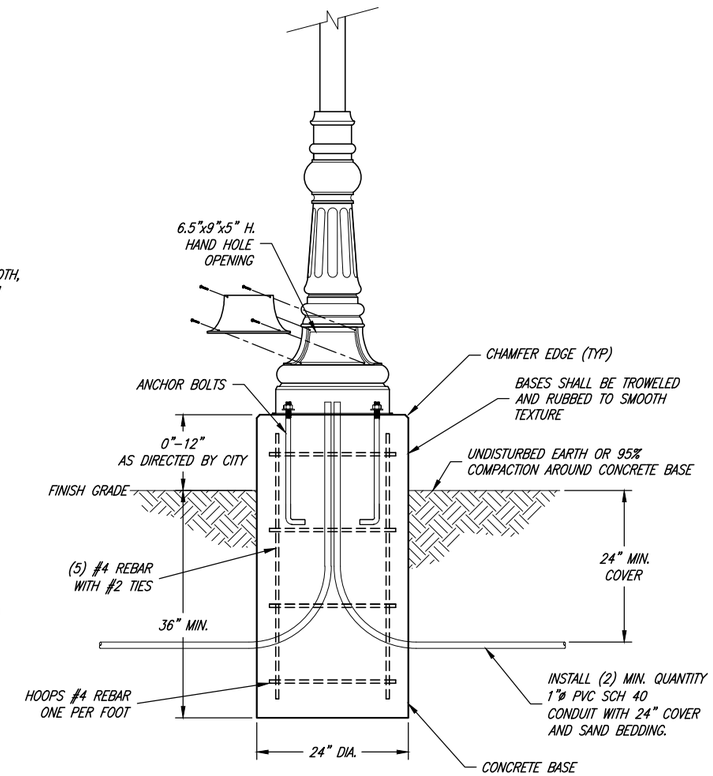

GROUNDING NOTE:
POLE TO BE GROUNDED TO BOTTOM HOOP OF POLE CAGE WITH #6 SOLID Cu WIRE. USE CHAIR LUG ON GROUND STUD LOCATED IN HANDHOLE OF POLE. USE UFER RATED GROUND CLAMP ON BOTTOM HOOP OF CAGE.

CONCRETE FOOTING DETAIL

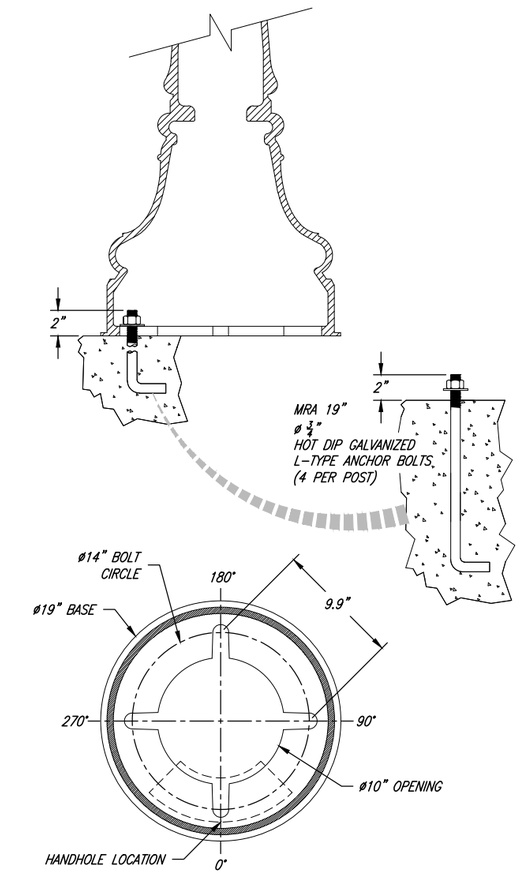

ANCHORAGE DETAIL

PROJECT ENGINEER	REV.	DATE	APPR.	SCALE: NA	DESIGNED BEB DRAWN BEB CHECKED CLB	JONES & ASSOCIATES CONSULTING ENGINEERS 1716 East 5600 South South Ogden, Utah 84403 (801) 476-9767	TREMONTON CITY CORPORATION PUBLIC WORKS STANDARDS CITY OWNED STREET LIGHT DETAILS	SHEET: 20 OF 21 SHEETS
DATE								

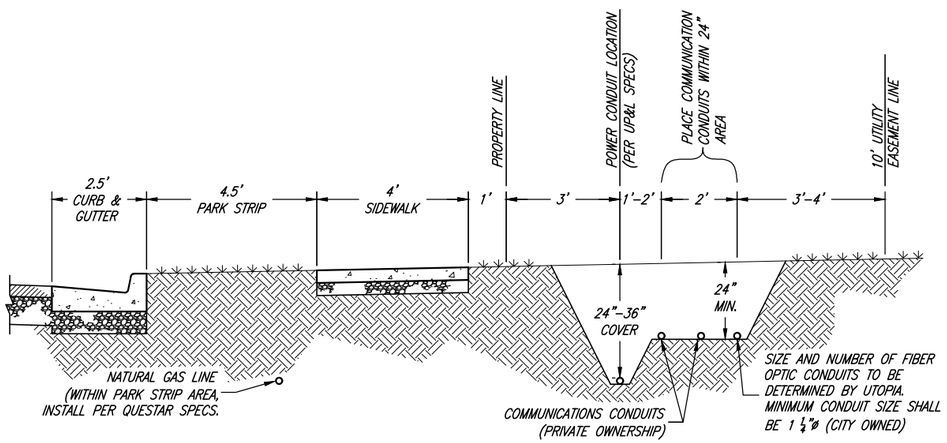

TYPICAL NEW UTILITY LOCATION TRENCH SECTION

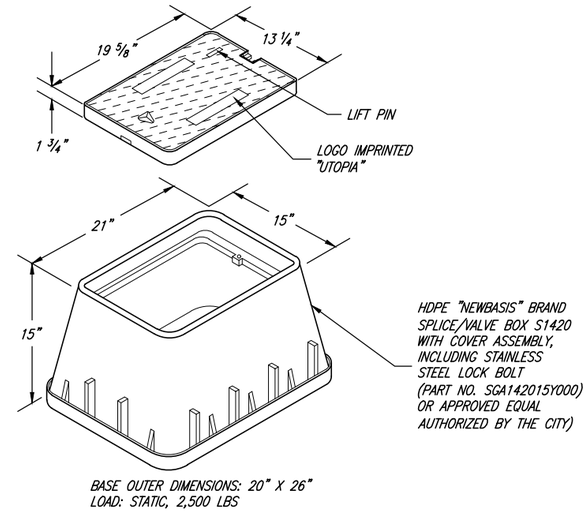

HH-1 FIBER OPTIC SERVICE BOX

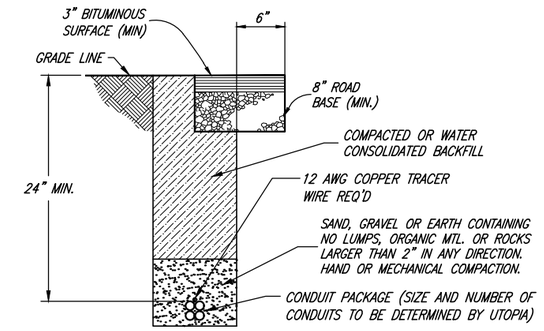

TYPICAL FIBER OPTIC TRENCH

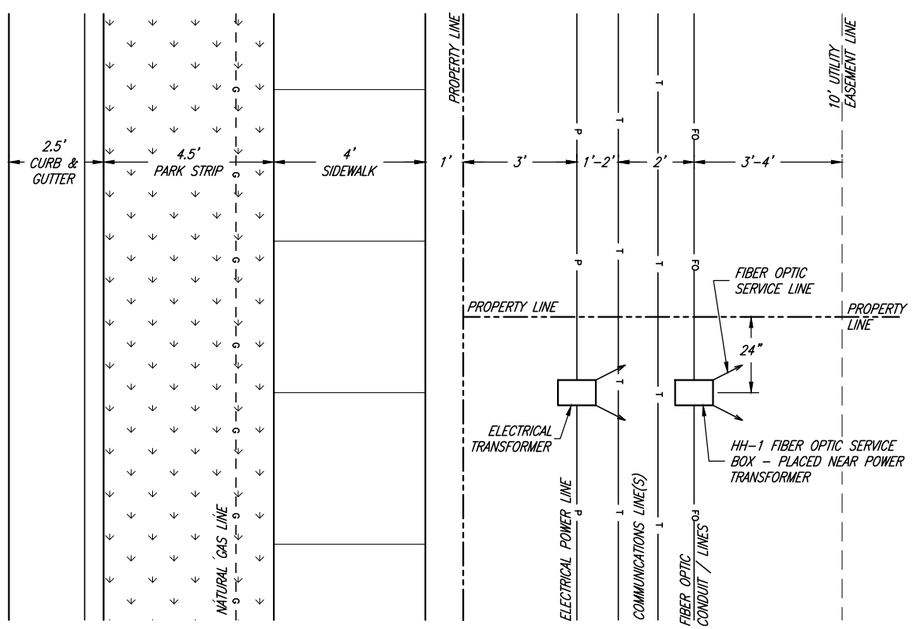

TYPICAL FIBER OPTIC LINE LOCATION DETAIL

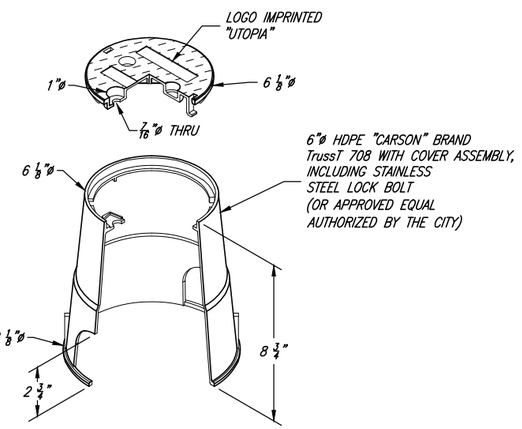

HH-FP FIBER OPTIC SERVICE BOX

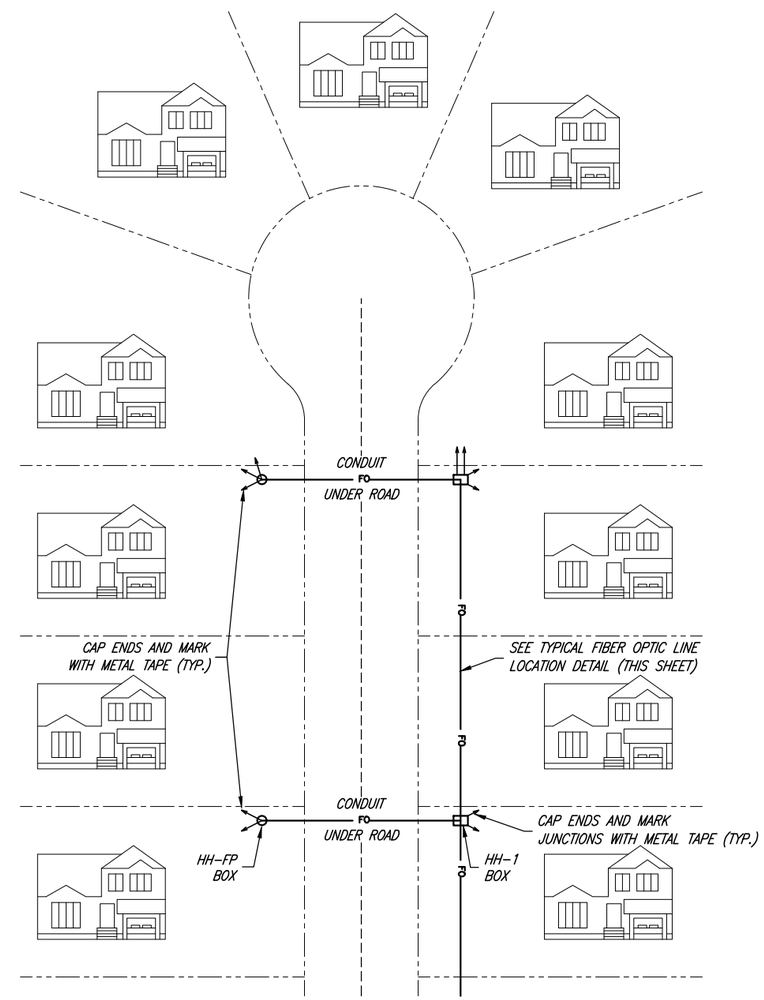

TYPICAL STREET LAYOUT FOR CONDUIT PLACEMENT

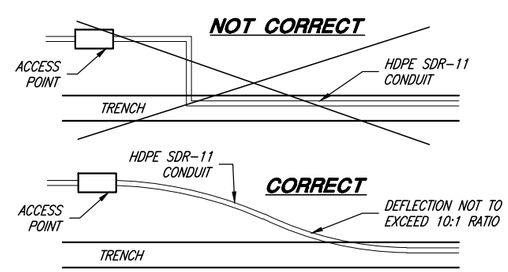

CONDUIT BENDS

GENERAL NOTE:
FIBER OPTIC SERVICE BOXES SHALL NOT BE INSTALLED IN SIDEWALK OR DRIVEWAY AREAS.

PROJECT ENGINEER				SCALE: NA	DESIGNED BEB	JONES & ASSOCIATES CONSULTING ENGINEERS 1716 East 5600 South South Ogden, Utah 84403 (801) 476-9767	TREMONTON CITY CORPORATION
DATE	REV.	DATE	APPR.		DRAWN BEB		PUBLIC WORKS STANDARDS
					CHECKED CLB		STANDARD FIBER OPTIC COMMUNICATION LINE DETAILS

SHEET: 21 OF 21 SHEETS